TECHNICAL DATASHEET

SANIPEXGROUP

AQUADRAIN

AQD-DL0048-20X20-CP

ES19 FLOOR DRAIN WITH VERTICAL OUTLET 200X200 CP

CHROME

5 YEAR GUARANTEE

TECHNICAL DRAWING

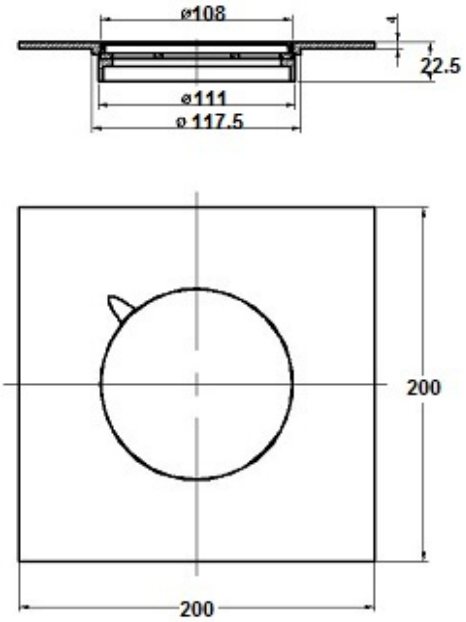

SPECIFICATIONS

Brand	AQUADRAIN
Range	AQUADRAIN
Product code	AQD-DL0048-20X20-CP
Finish/Colour	CHROME
Product type	FLOOR DRAIN
Material	BRASS OTHER

TECHNICAL INFORMATION

111MM DIA. FLOOR DRAIN

LAY ON COVER PLATE

WITH REMOVABLE GRATE

111MM O/D CONNECTION

W X D X H: 200 X 200 X 22.5