TECHNICAL DATASHEET

SANIPEXGROUP

AQUADRAIN

AQD-VER150-SV

FLOOR DRAIN 150X150MM SS

POLISHED STAINLESS STEEL

5 YEAR GUARANTEE

TECHNICAL DRAWING

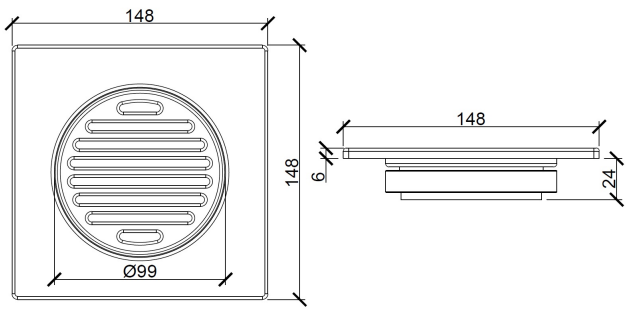

SPECIFICATIONS

Brand	AQUADRAIN
Range	AQUADRAIN
Product Code	AQD-VER150-SV
Finish / Colour	POLISHED STAINLESS STEEL
Material	STAINLESS STEEL
Product Type	FLOOR DRAIN
Connection Size	Ø100MM
W X D X H	150 X 150 X 46
Net Weight (KG)	0.32
Outlet	VERTICAL
Outlet Size	DIA. 100 MM
Stainless Steel Grade	304

For more information about this product or our full product range please contact us:

info@sanipexgroup.com | +971 (0) 4 507 6000 | www.sanipexgroup.com