TECHNICAL DATASHEET

SANIPEXGROUP

CONCEALED FLUSHING CISTERNS

AQE-B695-D2-ESG1

FURNITURE CISTERN FOR BACK TO WALL WC

WHITE

10 YEAR GUARANTEE

Emirates Quality Mark NB-0003

BOX CONTENTS

CISTERN, ADJUSTABLE FLUSH BEND, FASTENING MATERIAL

TECHNICAL DRAWING

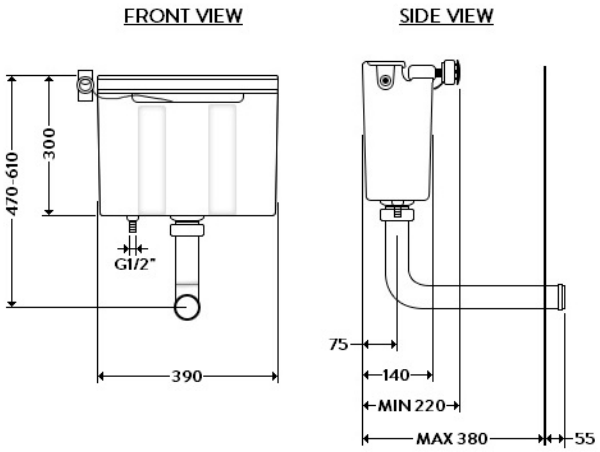

SPECIFICATIONS

Brand	AQUAECO
Range	CONCEALED FLUSHING CISTERNS
Product Code	AQE-B695-D2-ESG1
Finish / Colour	WHITE
Material	PLASTIC
Product Type	CONCEALED CISTERN
Connection Size	1/2"
W X D X H	390 X 220 X 300
Fixing Kit	INCLUDED
Flush Function	DUAL FLUSH
Install Depth	220-380 MM
Installation Height	470-610 MM
Installation Type	CONCEALED
Mounting Type	WALL MOUNTED
Net Weight (KG)	2.08
Operation	MANUAL FLUSH
Tank Depth	146 MM