TECHNICAL DATASHEET

SANIPEXGROUP

KITCHEN SINKS

AQE-ECO-8042-U-SS

AQUAECO UNDERMOUNT DOUBLE BOWL SINK 800X420 STAINLESS STEEL

SATIN STAINLESS STEEL

10 YEAR GUARANTEE

BOX CONTENTS

KITCHEN SINK, OVERFLOW KIT, FIXING KIT, INSTALLATION GUIDE

TECHNICAL DRAWING

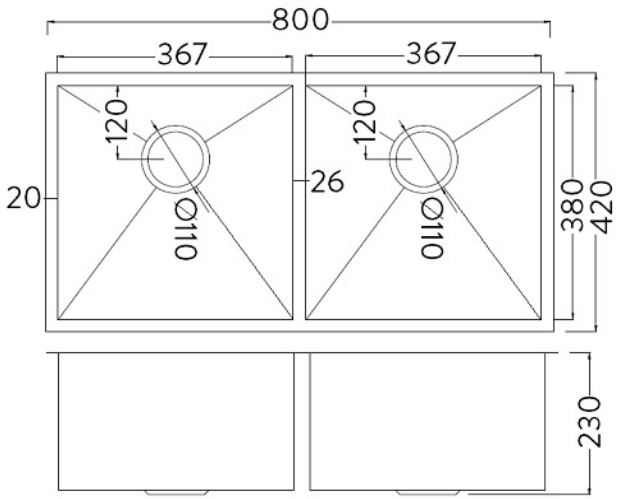

SPECIFICATIONS

Brand	AQUAECO
Range	KITCHEN SINKS
Product Code	AQE-ECO-8042-U-SS
Finish / Colour	SATIN STAINLESS STEEL
Material	STAINLESS STEEL
Product Type	KITCHEN SINK
Connection Size	1 1/2"
W X D X H	800 X 420 X 230
Fixing Kit	INCLUDED
Mounting Type	UNDERMOUNTED
Net Weight (KG)	9.55
No Of Bowls	DOUBLE
Overflow	WITH OVERFLOW
Overflow Kit	INCLUDED
Waste	INCLUDED

For more information about this product or our full product range please contact us:

info@sanipexgroup.com | +971 (0) 4 507 6000 | www.sanipexgroup.com