TECHNICAL DATASHEET

SANIPEXGROUP

KITCHEN MIXERS

AQE-Q-361-CP

Q KITCHEN SINK MIXER CHROME

CHROME

10 YEAR GUARANTEE

Emirates Quality Mark

NB-0003

BOX CONTENTS

KITCHEN SINK MIXER, 2 X 1/2" FLEXIBLE PIPES

TECHNICAL DRAWING

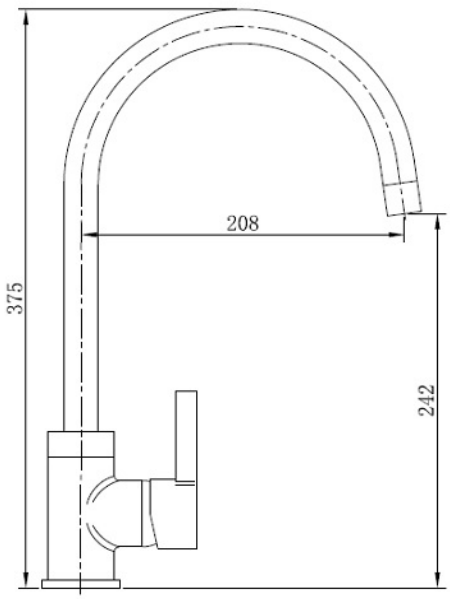

FLOW RATE GRAPH

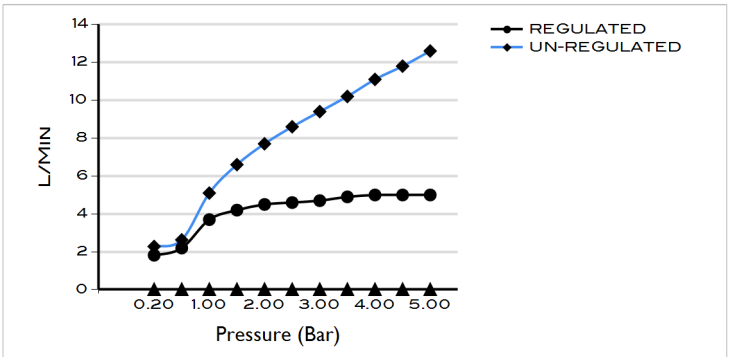

SPECIFICATIONS

Brand	AQUAECO
Range	KITCHEN MIXERS
Product Code	AQE-Q-361-CP
Finish / Colour	CHROME
Material	BRASS
Product Type	KITCHEN MIXER
Min. Operating Pressure	1.0 BAR MP
H	375
Handle Finish	CHROME
Handle Type	PULL HANDLE
Handles	1 HANDLE
Inlet Connection	1/2”
Mounting Type	DECK MOUNTED
Net Weight (KG)	1.18
Spout Length	208 MM
Spout Type	SWIVEL SPOUT

For more information about this product or our full product range please contact us:

info@sanipexgroup.com | +971 (0) 4 507 6000 | www.sanipexgroup.com