AQUAZONE

QUALITY PLUMBING SOLUTIONS

TECHNICAL DATA SHEET

FINISH:

CHROME (CP)

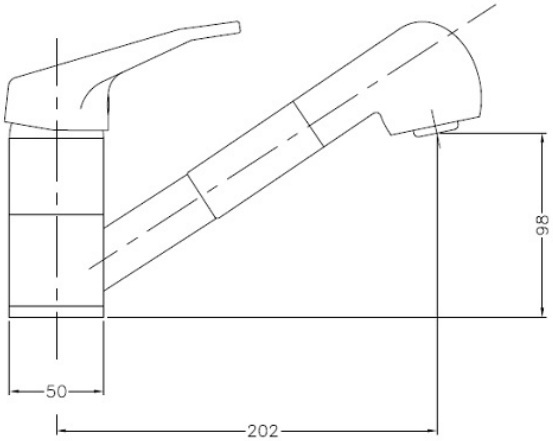

STAMFORD

PRODUCT DATA

PRODUCT CODE	:	AQE-STM-361-CP
PRODUCT TYPE	:	KITCHEN MIXER
BRAND	:	AQUAZONE
RANGE	:	STAMFORD
FINISH/COLOUR	:	CHROME
MATERIAL	:	BRASS
CONNECTION SIZE	:	1/2"
WATER PRESSURE	:	0.2-5 BAR
RMP	:	MP - 1.5 BAR
PACKAGING (MM)	:	W: 145.0 L:390.0 H:75.0

FLOW RATE GRAPH

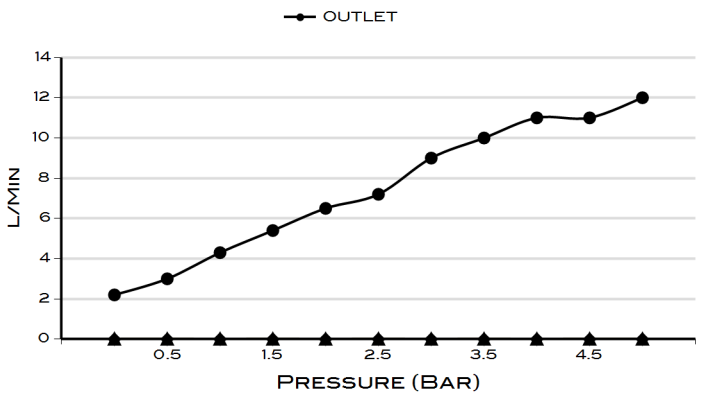

TECHNICAL INFORMATION

KITCHEN SINK MIXER

DECK MOUNTED

SINGLE LEVER

WITH PULL OUT HAND SHOWER

CARTRIDGE SXM-CAR-K40-A

SCOPE OF DELIVERY

10 YEAR GUARANTEE