# TECHNICAL DATASHEET

SANIPEXGROUP

**SHOWER ACCESSORY**

**AQP-OUT-R650-CP**

ES23 AQUAECO CONCEALED BIDET SPRAY MIXER W/ HOLDER CHROME

CHROME

10 YEAR GUARANTEE

## BOX CONTENTS

BIDET SPRAY MIXER

## TECHNICAL DRAWING

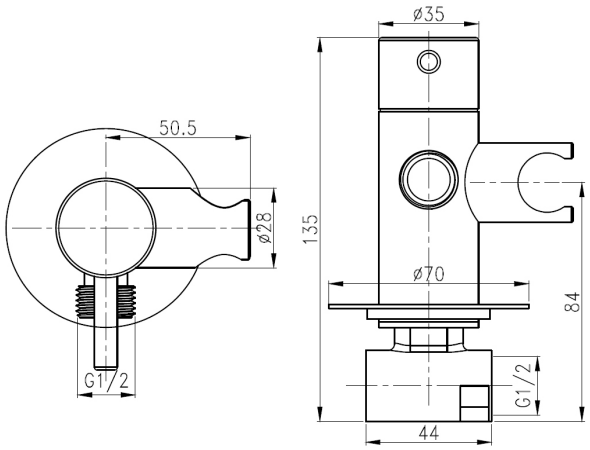


## SPECIFICATIONS

| | |
|---|---|
| Brand | AQUAECO |
| Range | SHOWER ACCESSORY |
| Product Code | AQP-OUT-R650-CP |
| Finish / Colour | CHROME |
| Material | BRASS |
| Product Type | BIDET MIXER |
| Connection Size | 1/2" |
| Handle Finish | CHROME |
| Handle Type | LEVER |
| Handles | 1 HANDLE |
| Inlet Connection | 1/2” |
| Mounting Type | WALL MOUNTED |
| Net Weight (KG) | 0.66 |

For more information about this product or our full product range please contact us:

info@sanipexgroup.com | +971 (0) 4 507 6000 | www.sanipexgroup.com