AQUAZONE
QUALITY PLUMBING SOLUTIONS

TECHNICAL DATA SHEET

FINISH:

White (WH)

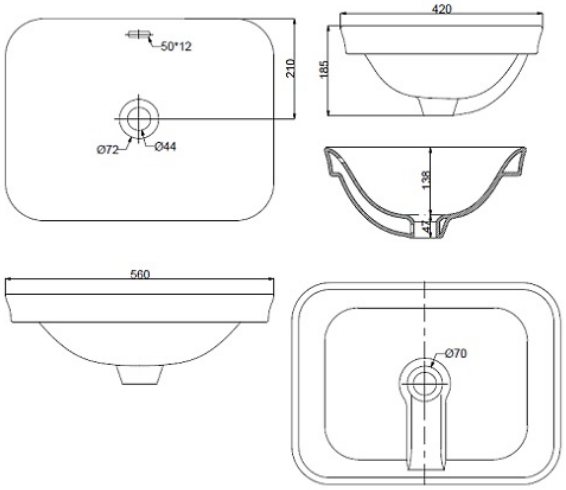

SENATOR

product data

Product code	:	AQS-SEN-701-WH
Product type	:	SEMI-INSET BASIN
Brand	:	AQUAZONE
Range	:	SENATOR
Finish/Colour	:	WHITE
Material	:	CERAMIC
Connection Size	:	1 1/4"
Water pressure	:	0.2-5 Bar
Packaging (MM)	:	W: 455.0 L:600.0 H:210.0
Weight	:	Gross: 12.6 kg Net: 10.8 kg

technical information

SEMI-INSET WASH BASIN

NO TAP HOLE

WITH OVERFLOW

RECOMMENDED WASTE DP-WBB-209-NS-UB-XX

RECOMMENDED WASTE BDP-WBB-205-S-UB-XX

FIXING KIT NOT REQUIRED

CE STANDARD: EN 14688

scope of delivery

SEMI-INSET WASH BASIN

10 YEAR GUARANTEE

CE