TECHNICAL DATASHEET

SANIPEXGROUP

M-LINE DIFFUSION **BDM-MLI-438-CP**

ES23 M-LINE DIFFUSION FLOOR MOUNTED BATH/SHOWER MIXER CHROME

CHROME

10 YEAR GUARANTEE

Emirates Quality Mark NB-0003

BOX CONTENTS

BATH/SHOWER MIXER

TECHNICAL DRAWING

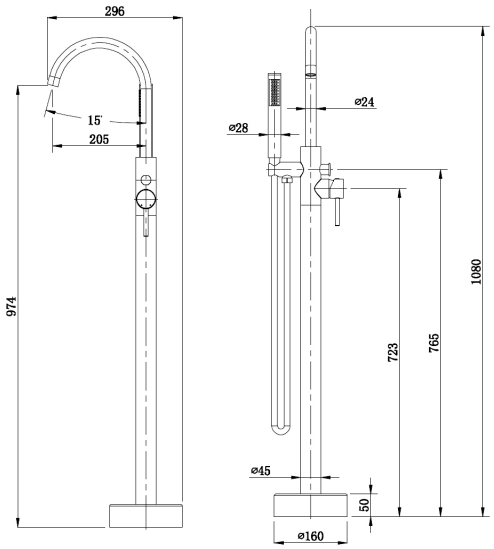

SPECIFICATIONS

Brand	BAGNODESIGN
Range	M-LINE DIFFUSION
Product Code	BDM-MLI-438-CP
Finish / Colour	CHROME
Material	BRASS
Product Type	FLOOR MOUNTED BATH MIXER
W X D X H	160 X 1080 X 296
Diverter Type	TURN
Hand Shower	SINGLE FUNCTION
Handle Finish	CHROME
Handle Type	SIDE LEVER
Handles	1 HANDLE
Mounting Type	FLOOR MOUNTED
Net Weight (KG)	5.42

FLOW RATE GRAPH

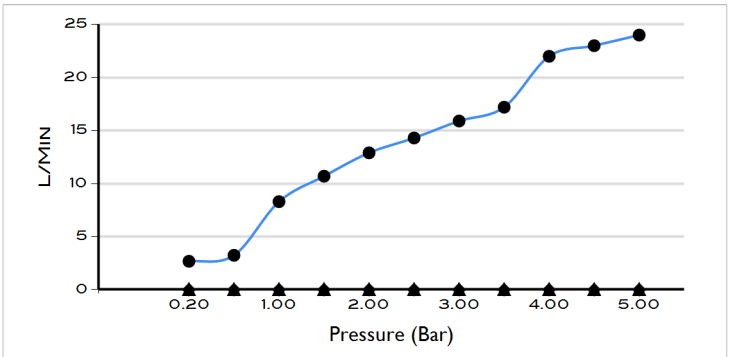

For more information about this product or our full product range please contact us:

info@sanipexgroup.com | +971 (0) 4 507 6000 | www.sanipexgroup.com