TECHNICAL DATASHEET

SANIPEXGROUP

M-LINE DIFFUSION **BDM-MLI-438-MB**

ES23 M-LINE DIFFUSION FLOOR MOUNTED BATH/SHOWER MIXER MATT BLACK

MATT BLACK

10 YEAR GUARANTEE
5 YEAR ON FINISHING

Emirates Quality Mark
NB-0003

BOX CONTENTS

BATH SHOWER MIXER, HAND SHOWER 150CM

TECHNICAL DRAWING

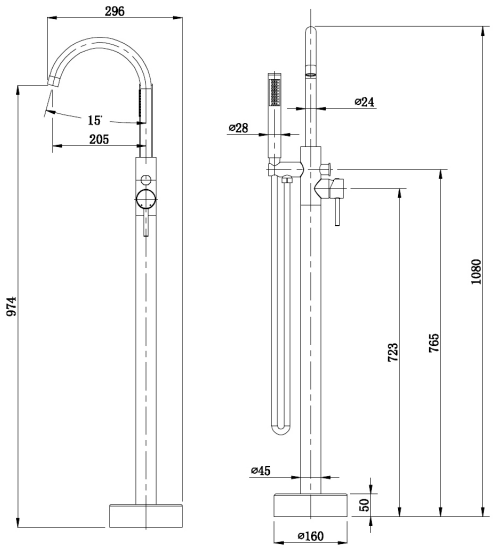

SPECIFICATIONS

Brand	BAGNODESIGN
Range	M-LINE DIFFUSION
Product Code	BDM-MLI-438-MB
Finish / Colour	MATT BLACK
Material	BRASS
Product Type	FLOOR MOUNTED BATH MIXER
Min. Operating Pressure	2.0 BAR MP
W X D X H	160 X 1080 X 296
Diverter Type	TURN
Hand Shower	SINGLE FUNCTION
Handle Finish	MATT BLACK
Handle Type	SIDE LEVER
Handles	1 HANDLE
Mounting Type	FLOOR MOUNTED
Net Weight (KG)	5.42
Tap Hole	1 HOLE

FLOW RATE GRAPH

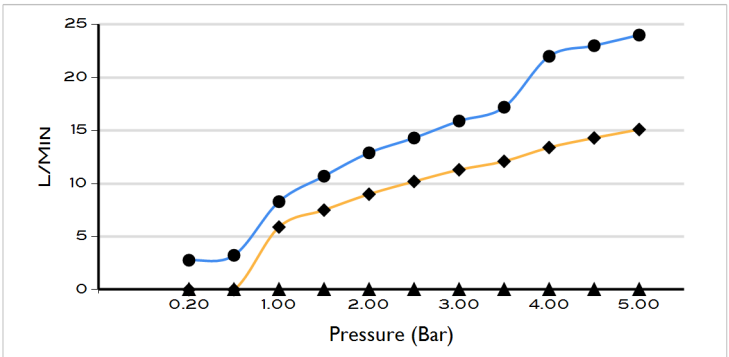

For more information about this product or our full product range please contact us:
info@sanipexgroup.com | +971 (0) 4 507 6000 | www.sanipexgroup.com