Installation

BAGNODESIGN
EXPERTLY CRAFTED BATHROOMS

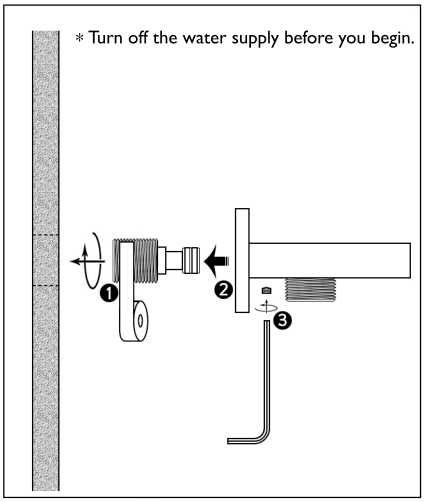

Loosen the screw with an allen key to remove the inlet thread. Wrap the inlet thread with PTFE tape and install in to the wall fixing. Fix outlet part back to the thread and tight the screw. Run water through the shower outlet to flush out any dirt and debris.

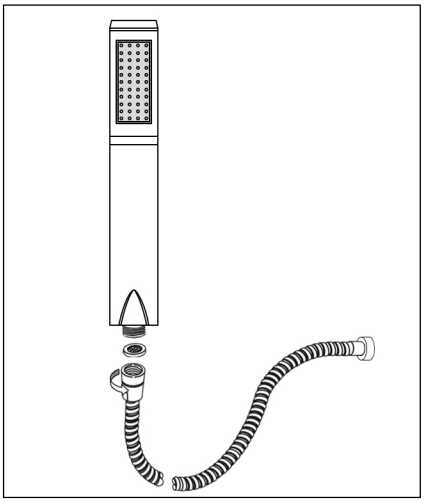

Insert the screen washer into the end of the inlet of the handshower hose. Tighten the handshower onto the hose until hand tight. Do not overtighten.

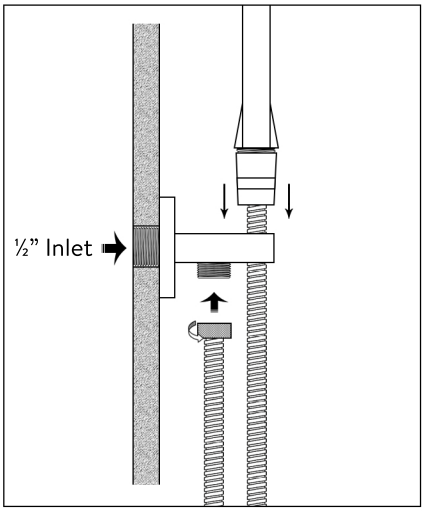

Install the hose onto the shower outlet. Use a suitable spanner to tighten the hose onto the shower outlet. Do not overtighten.

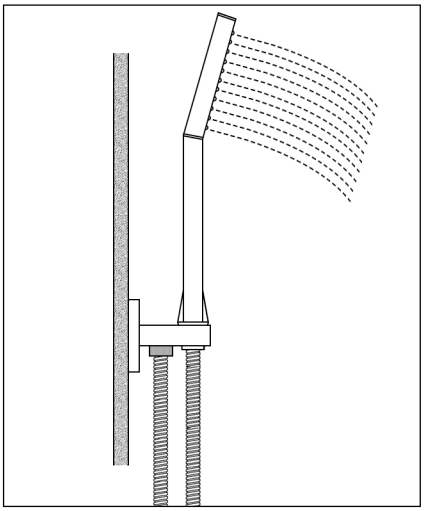

Turn on the water and test.

SMOOTH/CORSAIR/ZEPHYR/METREAUX

hand shower kit

Product Aftercare:

This hand shower has been designed and manufactured with great care and attention to detail. If you follow a few simple cleaning instructions, you will be able to enjoy their quality and beauty every day.

We recommend cleaning with a soft damp cloth and mild soap solution.

Do not use cream cleaners or cleaners containing bleach.

Do not scrub or scour.

Do not use abrasive cleaning agents.

Do not use solvent based cleaners.

We recommend the product is dried using a soft cloth after every use.