AQUAECO

SELF-CLOSING TAPS

AQE-ECO-306

SELF-CLOSING PUSH TAP

INSTALLATION AND MAINTENANCE GUIDE

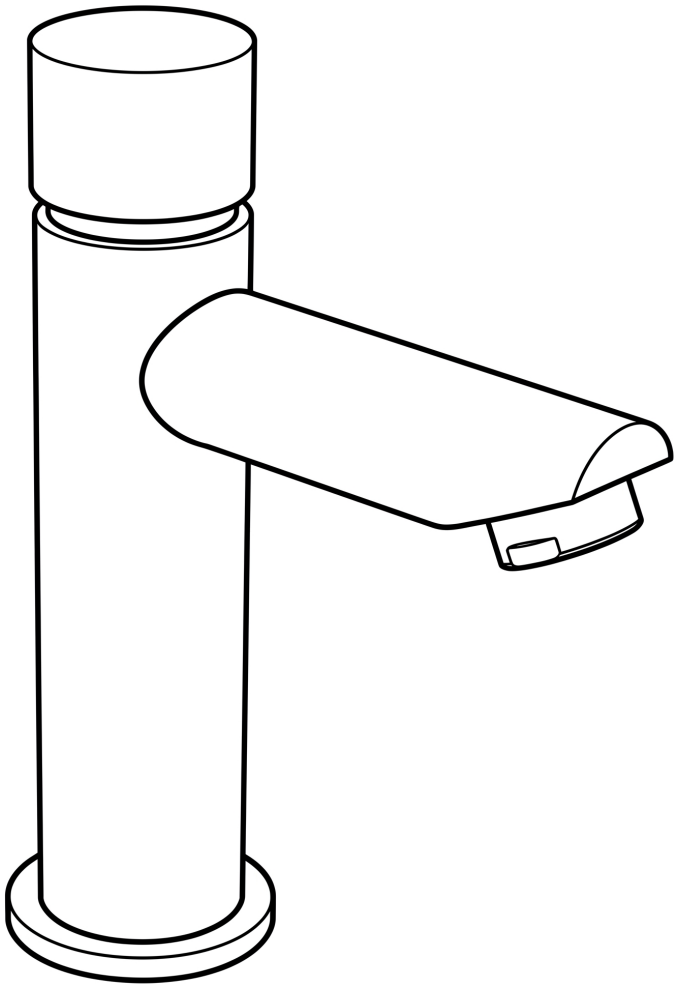

SANIPEXGROUP

COMPONENTS

COMPONENTS PROVIDED

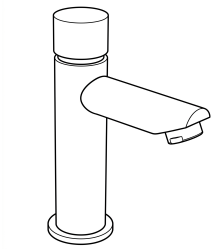

x1 MIXER

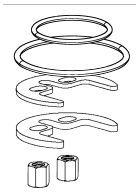

x 1 FIXING KIT

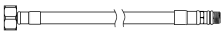

x 2 FLEXIBLE HOSE

TOOLS REQUIRED

x1 SCREW DRIVER

x1 ALLEN KEY

X1 ADJUSTABLE SPANNER

ATTENTION

IMPORTANT PLEASE READ

All products manufactured and supplied by BAGNODESIGN are fit for purpose as long as they are Installed, used correctly, cleaned and receive regular maintenance in accordance with these instructions.

Remove all packaging and check the product for damage or missing parts before commencing with the installation.

Any alterations made to this product and its components may infringe product certification, infringe water regulations and invalidate the guarantee. The Installation must comply with all local/national water supply authority regulations/bylaws and building and plumbing regulations, therefore we strongly recommend that your product be installed by a reputable qualified trade's person.

DISPOSAL GUIDANCE

The best way to ensure your product has a long life is to follow the Care and Maintenance guides set by the Manufacture after purchase. This document can be found at *www.sanipexgroup.com.*
The life cycle of the product is *not* in correlation to the product Guarantee; the standards the products are manufactured or certified to (e.g. CE & WRAS) can exceed past the Guarantee duration.

By following our recommended cleaning and maintenance guidelines, you will preserve the quality and appearance of your product, ensuring reliable performance and long-lasting enjoyment for many years.

PRODUCT CLEANING

We recommend cleaning with a soft damp cloth and mild soap solution.

DO NOT use cream cleaners or cleaners containing bleach.
DO NOT scrub or scour.
DO NOT use abrasive cleaning agents.
DO NOT use solvent based cleaners.

ATTENTION

WARNING:
FLUSH THE PIPES BEFORE CONNECTING

CORRECT PIPE CONNECTIONS

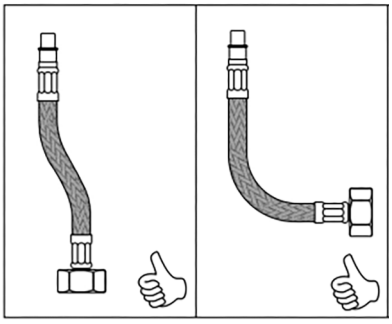

INCORRECT PIPE CONNECTIONS

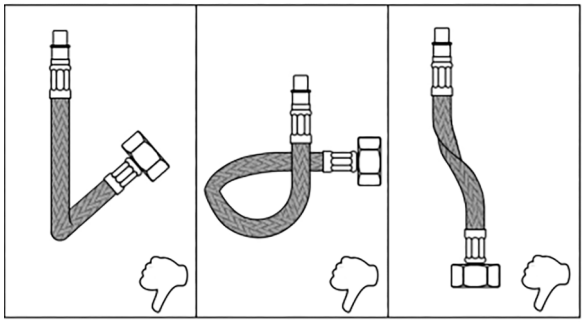

INLET WATER TEMPERATURES

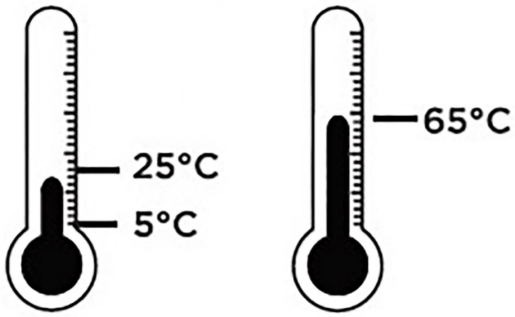

COLD WATER **HOT** WATER

WATER PRESSURE

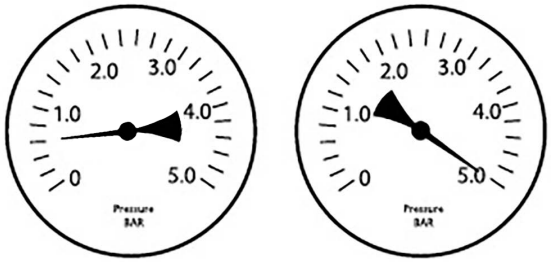

MIN 0.2 BAR **MAX** 5.0 BAR

Hot and Cold pressure should be kept balanced within 1 BAR

RECOMMENDED 2.0 BAR - 3.0 BAR

INSTALLATION

PRODUCT DIMENSION

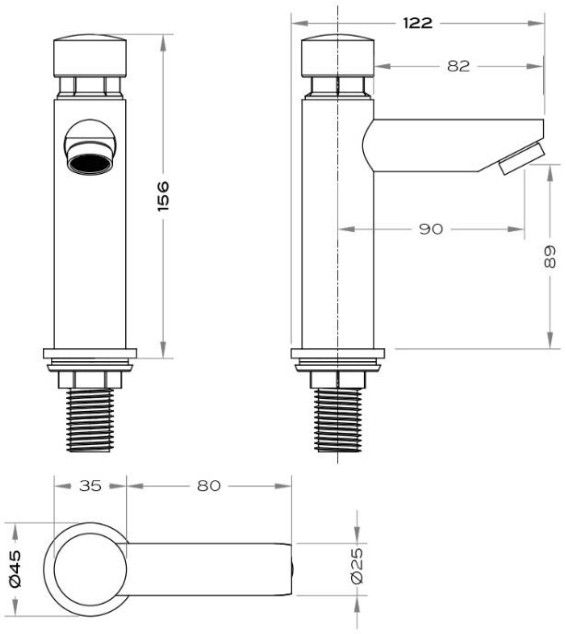

1

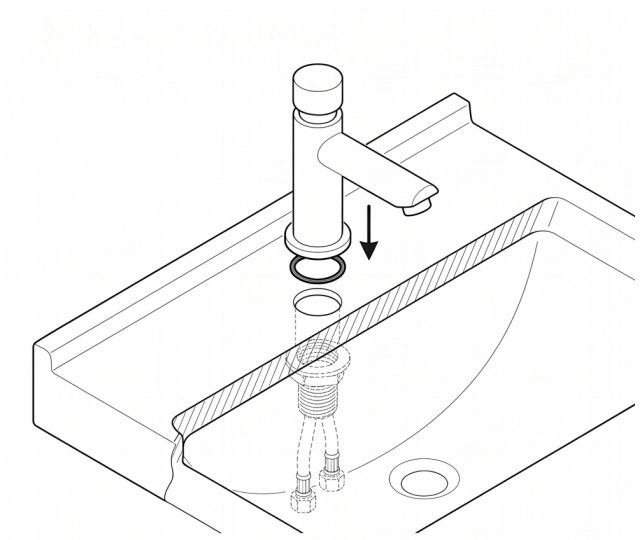

2

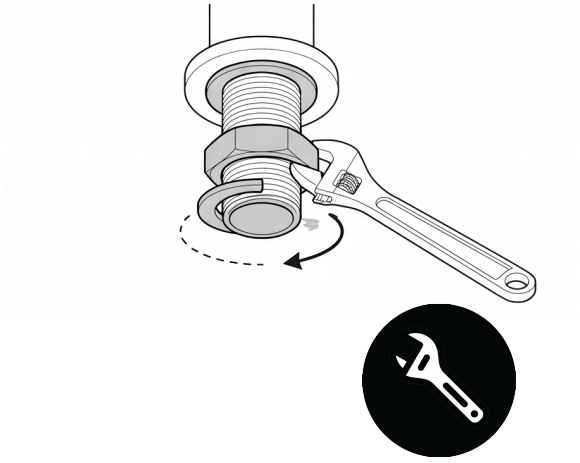

INSTALLATION

3

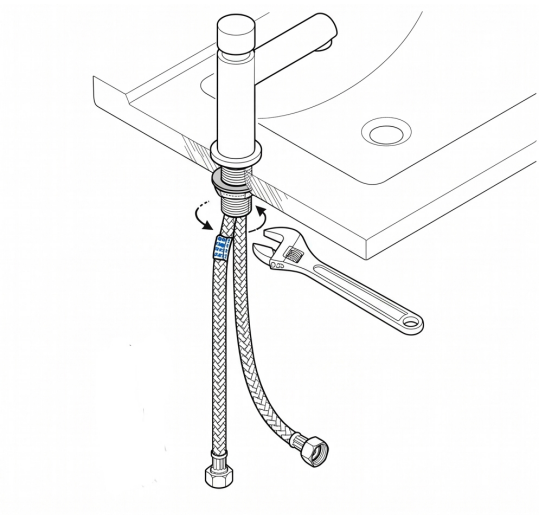

4

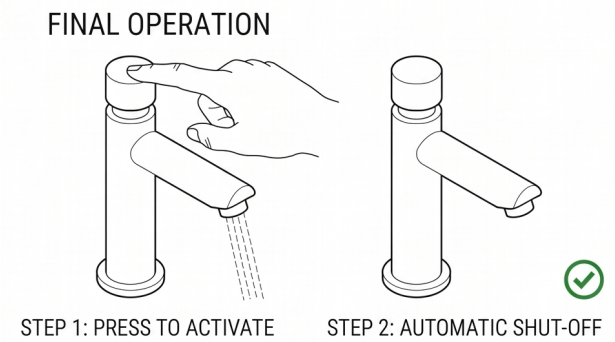

WARRANTY

Sanipex Group warrants that all Products will be free from manufacturing defects and design defaults on the date of purchase and for the duration mentioned in the Product Technical Specification sheet ("Warranty Period").

Liability of Sanipex Group shall be limited to either repairing or replacing the faulty Products, at its sole discretion, if the same are within the Warranty Period. If Sanipex Group has ceased manufacturing the Product and is unable to replace the Product or provide a suitable part, Sanipex Group will offer to replace the Product with a suitable alternative product that matches the Product as closely as possible.

This warranty shall not be applicable on third party products and in such cases the warranty terms of the concerned third party shall apply.

For further details and information about our Warranty conditions and where certain exclusions may apply, please visit **www.sanipexgroup.com/c/warranty**

AQUAECO

For more information visit **www.bagnodesign.it**

SANIPEXGROUP

This installation guide is for reference only. In case there is a discrepancy between that of the instructions and that of the actual product, the latter should be taken as standard. The rights of modification are reserved.