BAGNODESIGN

EXPERTLY CRAFTED BATHROOMS

Installation Guide

PRINCESS

Thermostatic shower mixer 1 Outlet

A member of SANIPEXGROUP

Please leave these instructions with the customer

GENERAL FEATURES

This mixer is suitable for all water heating systems provided it is installed correctly by a competent and qualified installer.

OPERATING SPECIFICATIONS

Hot water supply temperature:

Maximum: 85°C

Advisable: 65°C

Minimum: 5°C

Minimum difference between hot and mixed temperature 10°C

The temperature of the inlet hot water must be higher than the maximum mixed water temperature required from the outlet.

Working pressures

Maximum: 10 bar

Minimum: 1 bar

Hot and cold operating pressures should be kept as balanced as possible in order to maintain maximum efficiency.

When the supply pressure is higher than 5 bar a pressure reducing valve should be fitted before the shower mixer.

TECHNICAL DATA

The mixer is supplied with a cover plate for the installation at a depth from 70 mm to 89 mm. The temperature control knob is pre-set from the manufacturer at 38°C.

The mixer ports are supplied with a female thread G ½", G ¾", NPT½", NPT ¾".

The thermostatic mixer is provided with an additional outlet at the base of the mixer. When using the bottom outlet a flow control is required between the mixer and the outlet.

The bottom outlet is sealed with a removable plug.

PLUMBING RECOMMENDATIONS

- An independent hot and cold water supply is required for the shower system.
- The recommended pipe work should be 22mm minimum for low pressure system.
- If more than one shower mixer is installed, the minimum feed should be 28mm. (ensure adequate supply of both hot and cold water can be maintained)
- READ CAREFULLY THIS MANUAL BEFORE USING YOUR MIXER AND KEEP IT AT HAND FOR FUTURE REQUIREMENTS

INSTALLATION

Consider the thickness of the final coating (tiles, marble etc.)

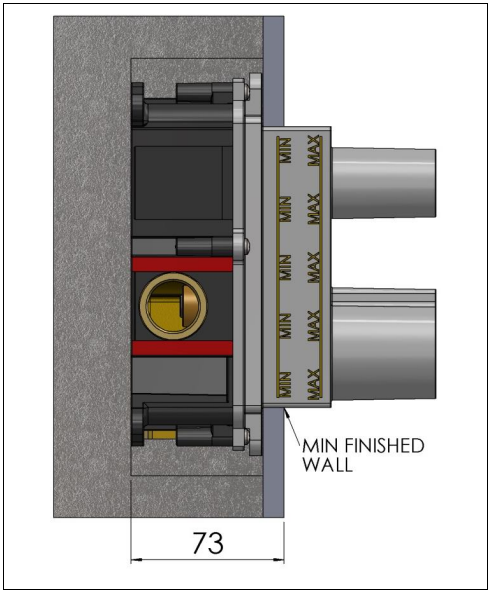

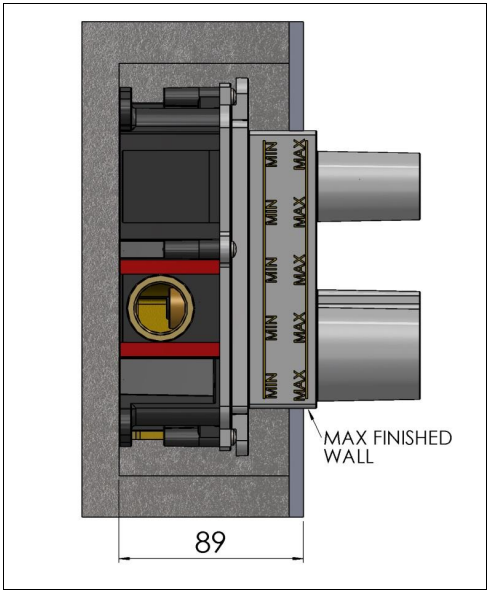

Keep a 135x100 mm hole in the wall to cut the protection and for the future maintenance of the product.

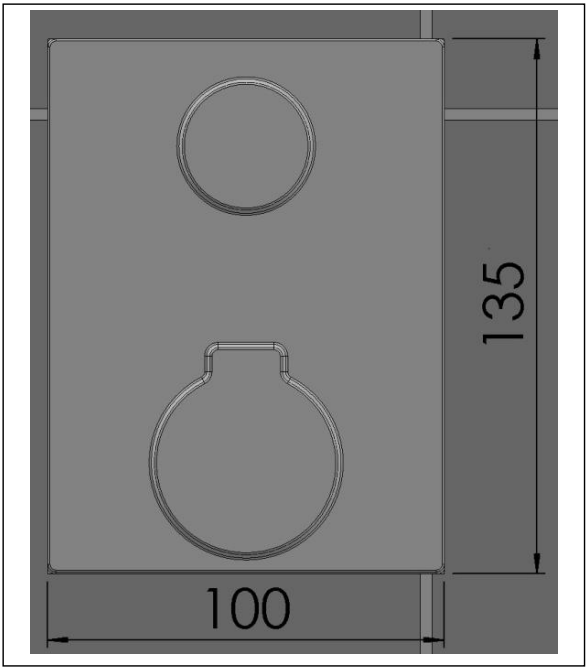

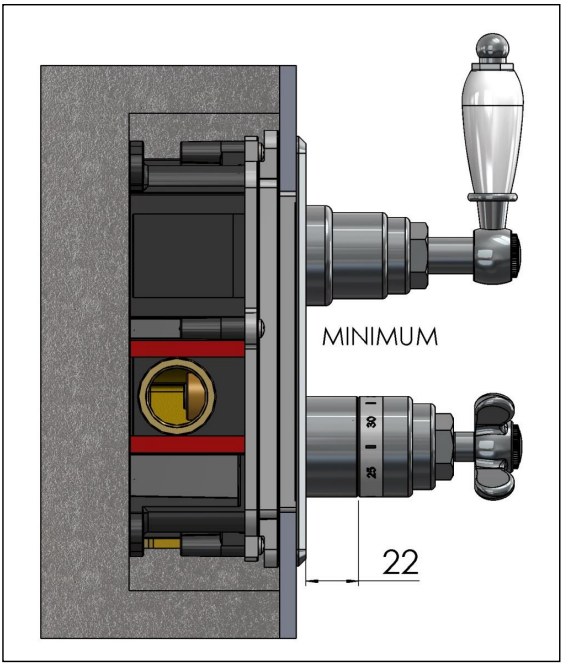

The plate slides from a minimum of 22 mm to a maximum of 1 mm.

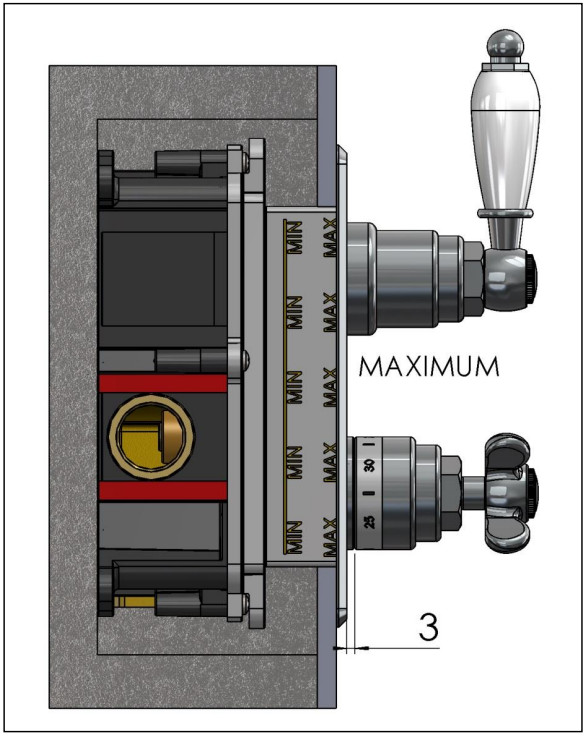

Before fixing the box, screw into the mixer ports the correct fittings for the type of tube chosen for your hydraulic system.

ATTENTION Fittings not supplied.

Use a level to find the correct position

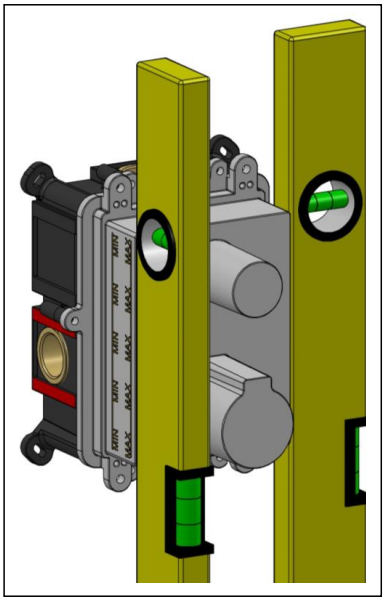

For the in-wall installation, drill the wall and use the plugs and screws to fix the box to thewall

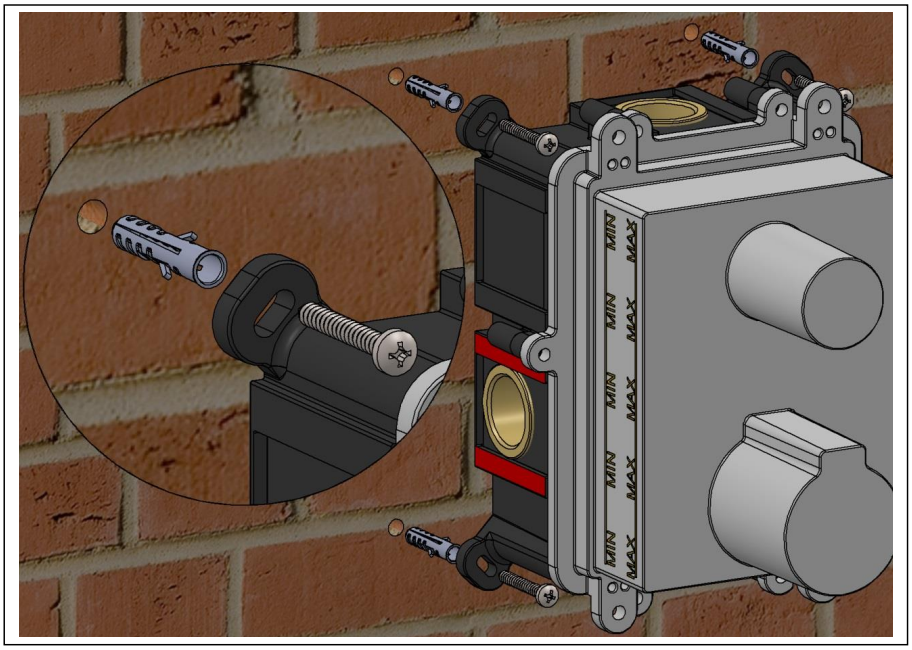

For the frame installation use the screws to fix the box to the woods

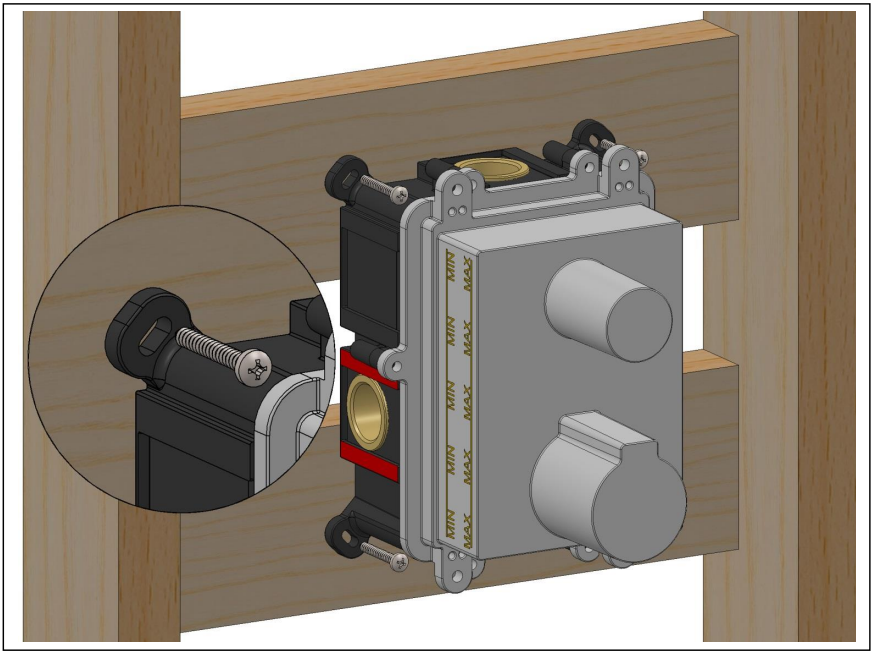

For the rear installation use the screw to fix the box to the drywall

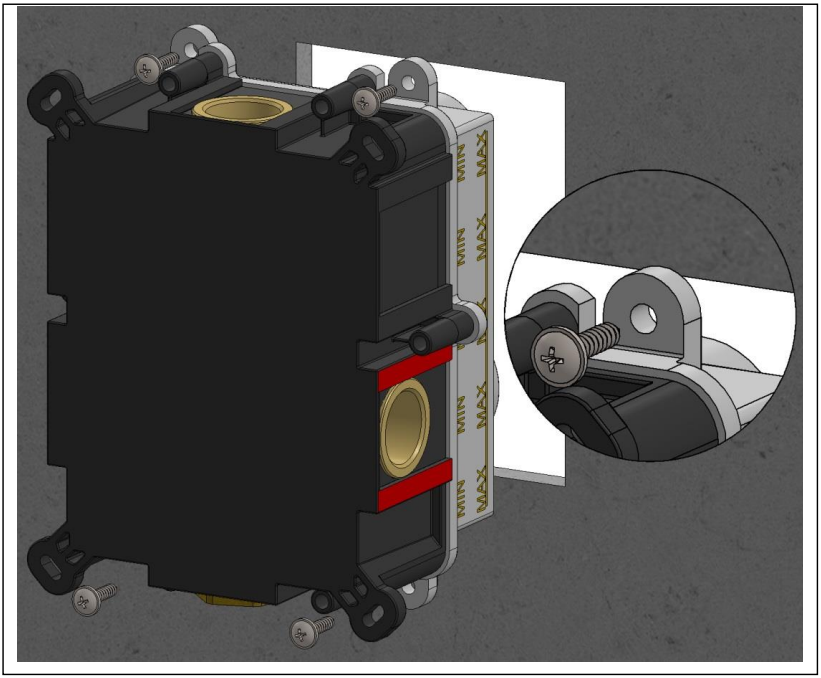

The box is made of plastic material
ATTENTION Never expose box to open flame or excessive heat. In case of mixer ports NPT threaded, use fittings with a minimum length of 3".

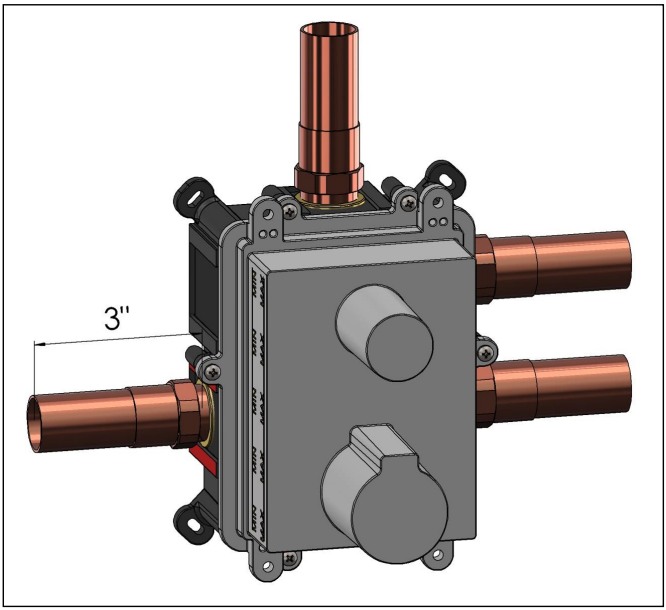

Installation scheme

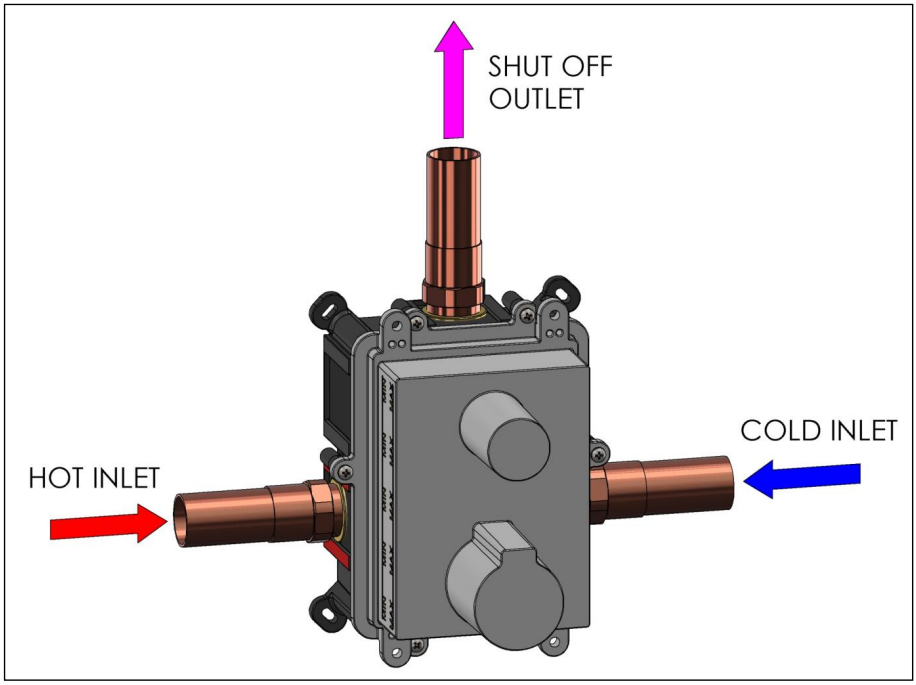

Before tiling attach the seal to the wall with glue.

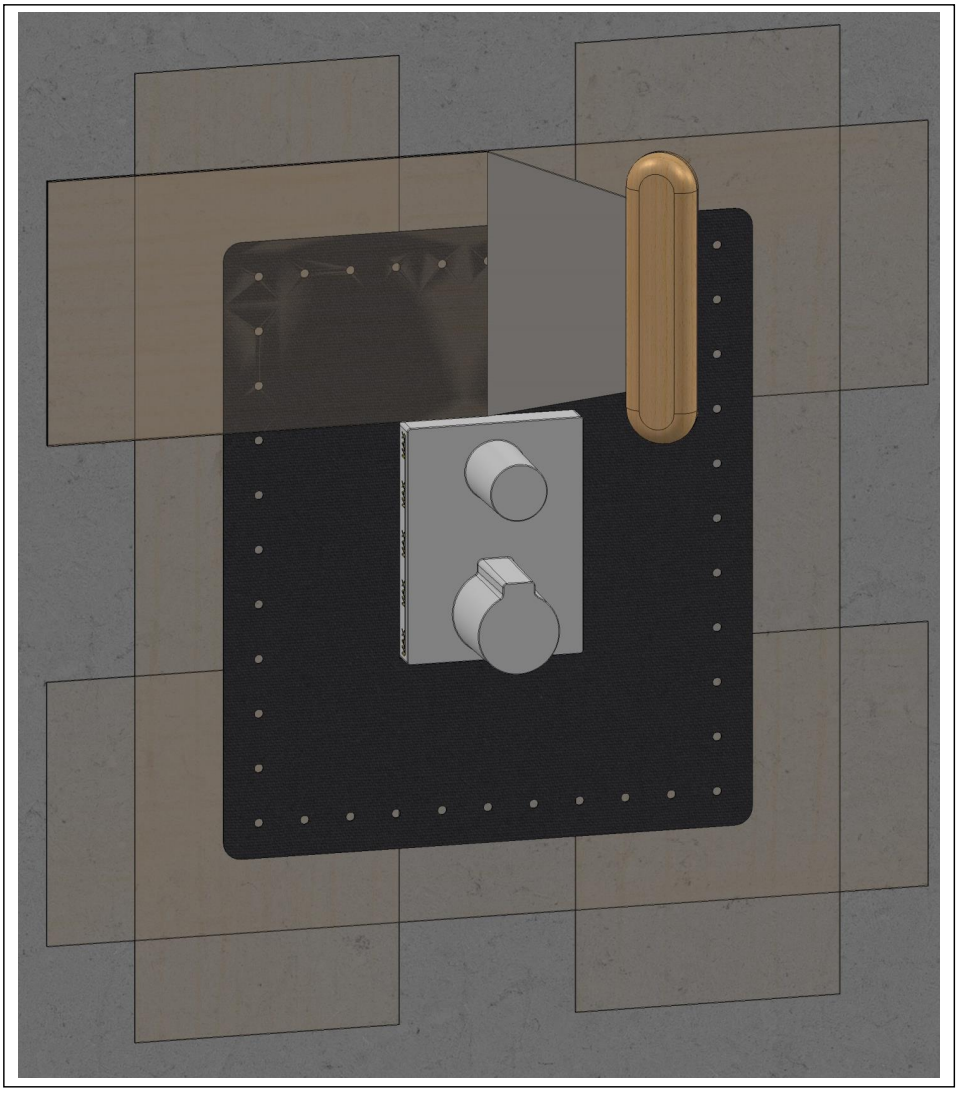

TRIM FIXING

Once the mixer is installed in the wall, cut along the finished wall and remove the plastic guard.

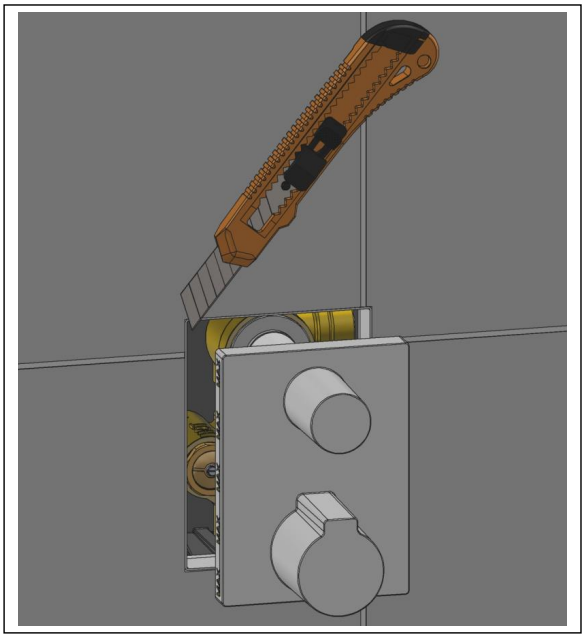

Put the silicone between the plastic guard and the finished wall.

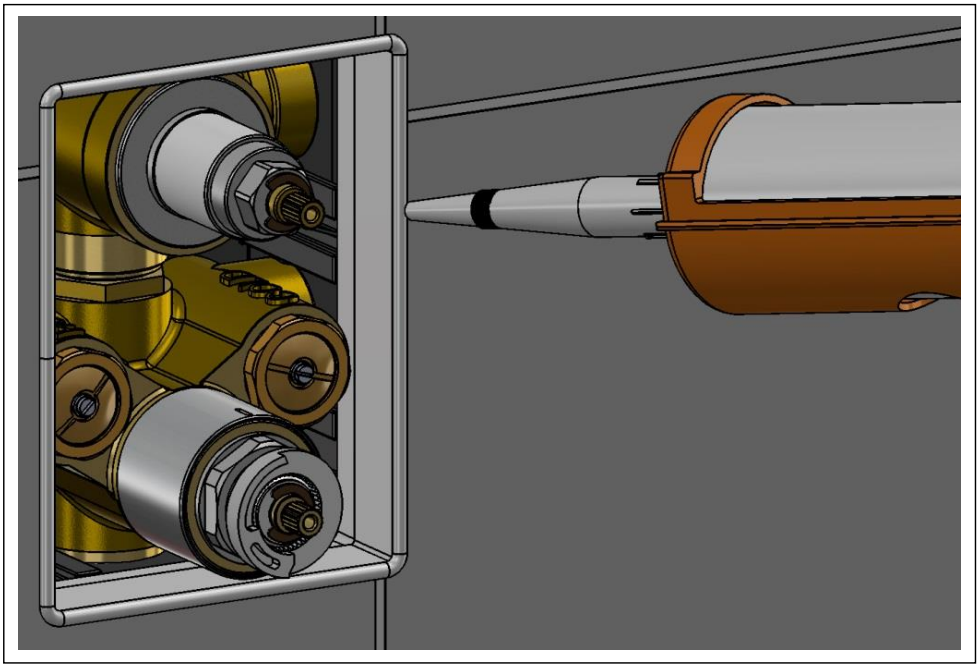

- Fix the cover plate (1) on the threaded rod (2) and on the chromed ring (3).
- Screw the adapter (5) with the o-ring (4), until the plate is against the wall.
- Fix the rod (6) and fix the screw (7).
- Fit the thermostatic handle (8).
- Fit the cross handle (9).
- Fit the screw (10).
- Fit the two caps (11).
- Screw the lever (12)

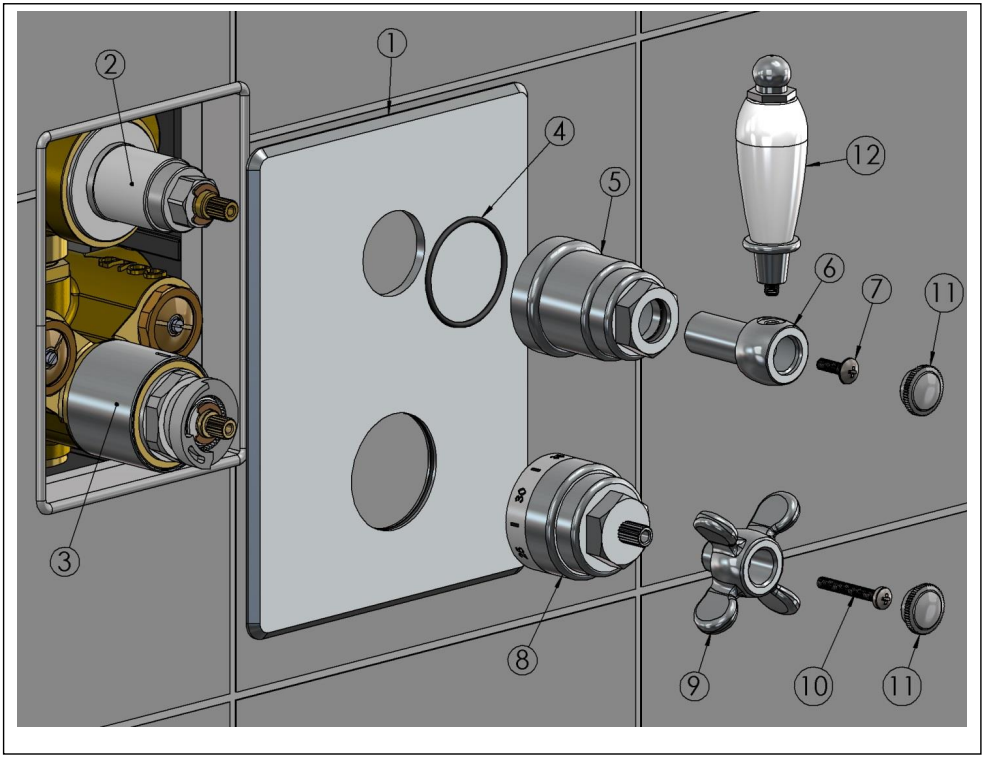

MAINTENANCE REPLACEMENT OF THE THERMOSTATIC CARTRIDGE AND VALVE HOLDER

Before proceeding with the maintenance of the cartridge, remove the handles and the cover plate. See the instructions shown in section “TRIM FIXING”.

THERMOSTATIC CARTRIDGE

1) Close the water inlets. With closures on the valve holders (3), screw for 7 turns the front screws with a flat screwdriver, in order to isolate the thermostatic cartridge.
2) Remove the stop ring(1).
3) Unscrew the thermostatic cartridge(2) anti-clockwise with a 30mm wrench.
4) Remove the thermostatic cartridge(2) and clean its filters under running water or leave to soak in vinegar in presence of limestone. **Grease the O-rings and, if damaged, replace them with new ones. 2x OR 2100 mm 25,12 x 1,78 1x OR 2106 mm 26,7 x 1,78**
5) Assemble the trim following the instructions of TRIM FIXING.

VALVE HOLDER

1) Close the water inlets
2) Unscrew the valve holders (3) anti-clockwise with a 27mm wrench. **DO NOT USE A SCREW DRIVER**
3) Remove the valve holders and clean the filters under running water or leave them soak in presence of limestone
4) **Exerting a max torque of 8-10 Nm or 70-80 lbf.in for replacement**

POSITION OF THE STOP RING

1) Place the stop ring(1) as shown in the image below.
2) Using the handle, rotate the broached rod (A) to reach the set temperature of 38°C (check the temperature with a thermometer).
3) **Turn clockwise for cold or anti-clockwise for hot water**.

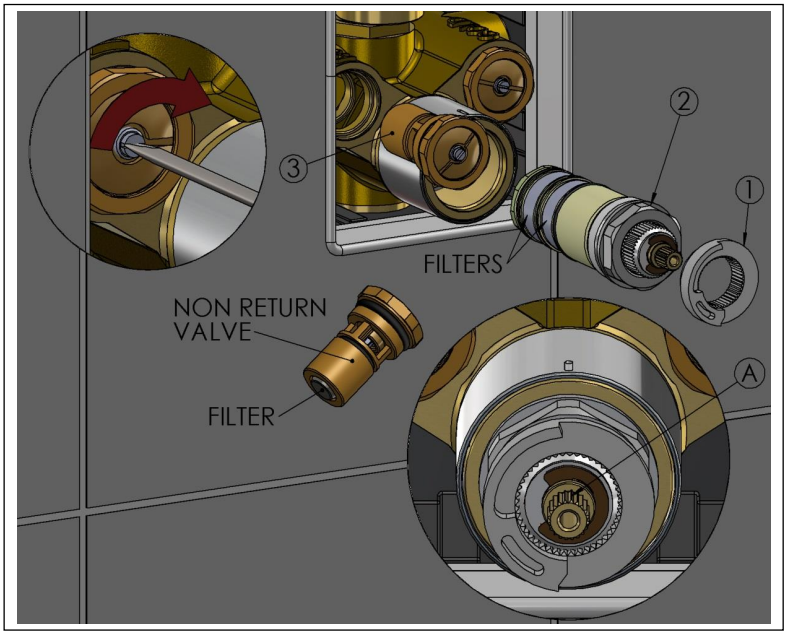

MAINTENANCE-REPLACEMENT OF THE SHUT OFF

Before proceeding with the maintenance of the shut off, remove the handles and the cover plate. See the instructions shown in section “TRIM FIXING”.

1) Close the water inlets.
2) Unscrew the threaded rod (1).
3) Unscrew the headwork (2) anti-clockwise, with a 17 wrench.
4) Before replacing the cartridge, clean thoroughly and grease the inner seat of the body.
5) Replace the headwork (2) and screw the threaded rod (1).
6) Assemble the trim following the instructions of TRIM FIXING.

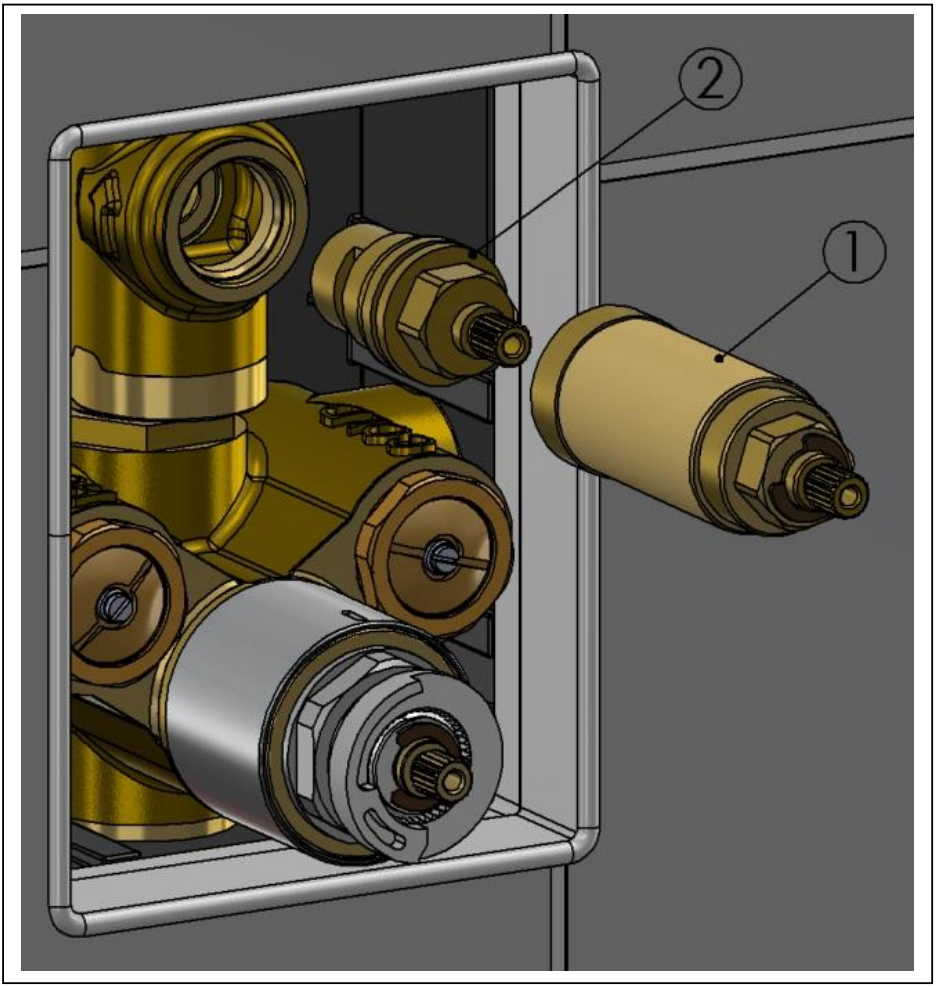

IMPORTANT-CLEANING OF THE MIXER

After use the mixer should be maintained by wiping with a soft, damp, clean cloth.
NO abrasive powders, detergents or polishes, cleaners containing alcohol, acid or corrosive chemicals should be used.

In case of prolonged disuse of the mixer in winter time, it is recommended to close the system and empty the mixer to avoid damages caused by frost.

NOTES

- If these simple instructions are followed this mixer will give many years of satisfactory use.
- The company has policy of continuous improvement and reserve the right to change specification without notice.

TROUBLE SHOOTING

Problem	*Cause*	*Solution*
1. Reduced or missing flow.	*a)* Closed water inlets. *b)* Blocked mixer. *c)* Blocked connecting pipes. *d)* Blocked hand shower. *e)* Water flow reduction when other shutoff valves are in function.	*a)* Control the check valves. *b)* Check if the inlet filters are cleaned. *c)* Check if the connecting pipes are cleaned. *d)* Clean or replace the hand shower. *e)* Control if the check valves are fully open. Reduce the water flow of all open outlets.
2. The mixer does not shut off.	*a)* The gaskets are dirty. *b)* The gaskets are damaged.	*a)* Clean/replace the gaskets. *b)* Replace the headwork.
3. Water too cold.	*a)* There is no enough hot water flowing through the mixer. *b)* The boiler system does not give enough hot water. *c)* The hot water inlet is restricted.	*a)* Set the regulation handle towards the hot water side. *b)* Increase the temperature of the water fed from the boiler. *c)* Check for any restriction on the pipeline.
4. Water too hot.	*a)* There is not enough cold water flowing through the mixer. *b)* The cold water inlet is restricted.	*a)* Set the regulation handle towards the cold water side. *b)* Check for any restriction on the pipeline.
5. Temperature varies during use.	*a)* Temperature has decreased below the minimum required.	*a)* Wait for the hot water to be restored.
6. Fluctuation of temperature of the mixer water	*a)* Inverted connections. *b)* Inverted mixer.	*a)* Use a “reverse” cartridge. *b)* Invert the mixer
7. Increasing of the temperature by turning clockwise. Decreasing of the temperature by turning anti-clockwise	*a)* Inverted connections. *b)* Inverted mixer.	*a)* Use a “reverse” cartridge. *b)* Invert the mixer.

Note:-

BAGNODESIGN

EXPERTLY CRAFTED BATHROOMS

Oakwell Way, Birstall
Leeds, England WF9 1ZLU

A member of SANIPEXGROUP