VOLA 500, 590, 500T1
VOLA 2500
VOLA SC1, SC3, SC5, SC7, SC9, SC10, SC12

Fitting instruction
Montageanleitung
Monteringsvejledning
Monteringsvägledning
Montage hanleiding
Manuel de montage

590:

GODKENDT
TIL DRIKKEVAND

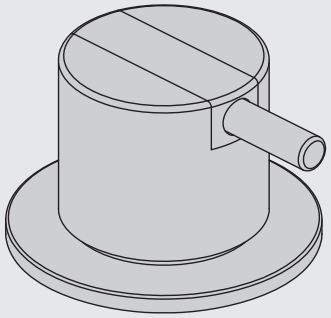

www.vola.com

vola

500 - 2500_V9_40999844

5 703182 096742

500/2500:

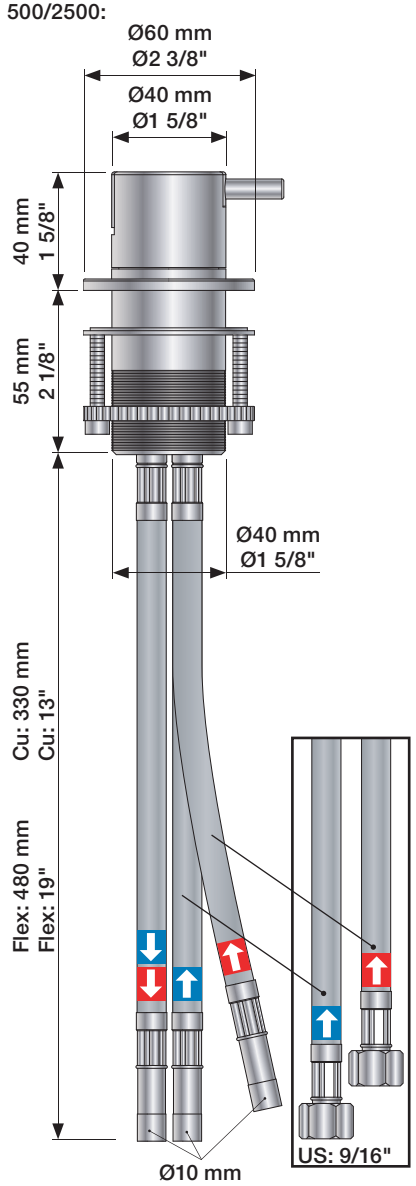

Data, 3 Bar /43.5 Psi:

	l/min.	Gal/min.
500:	14,5	3.8
590:	9,0	2.4
500-T1:	11,0	2.9
2500:	18,7	4.9
SC1:	18,7	4.9
SC5, 7:	18,0	4.8
SC9:	11,0	2.9

Max. 65°C, 150°F

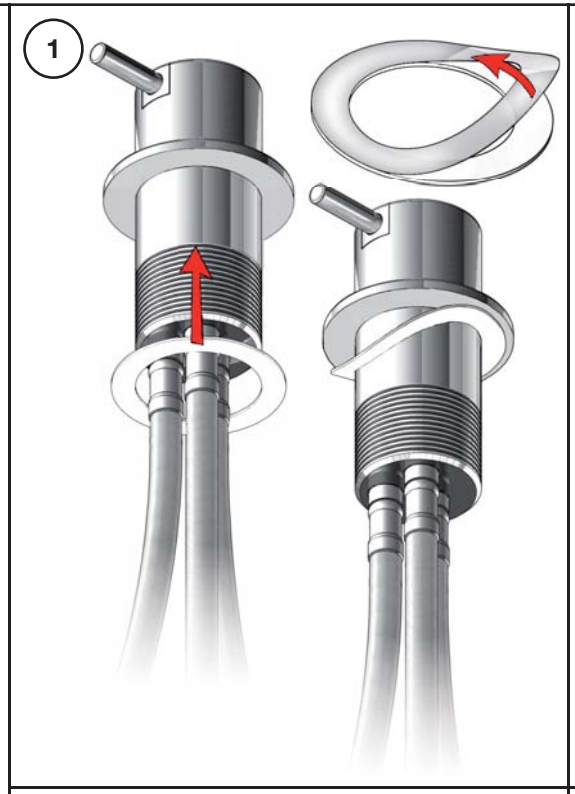

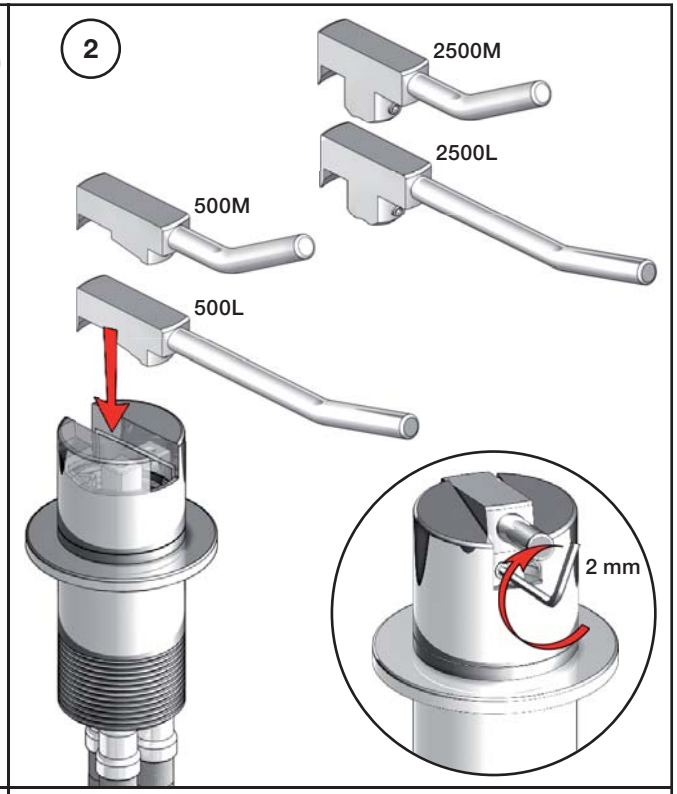

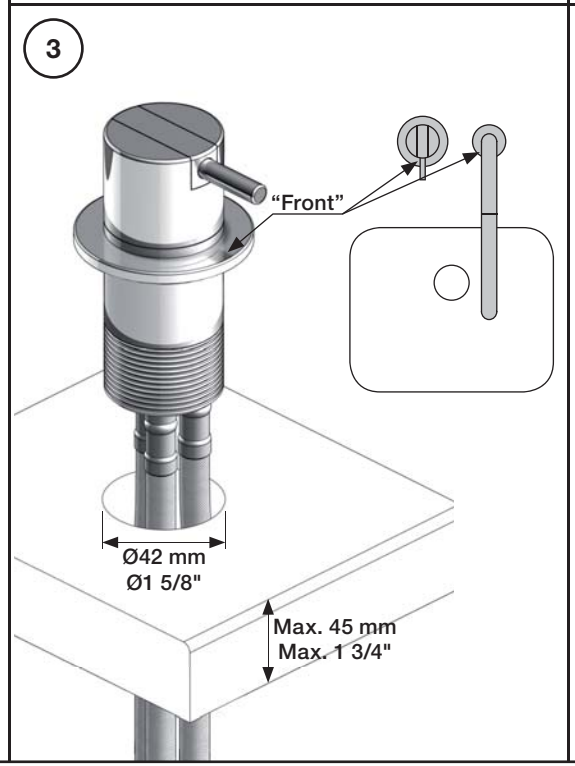

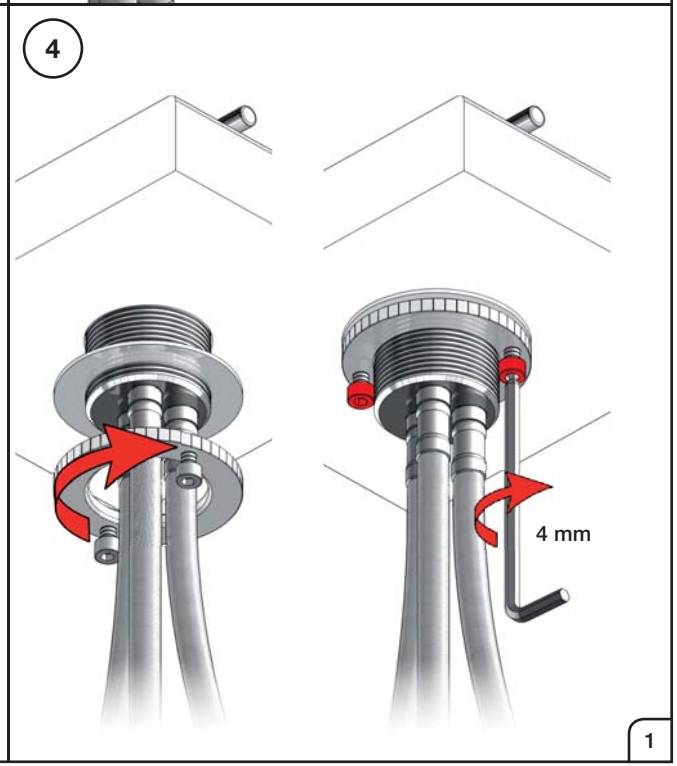

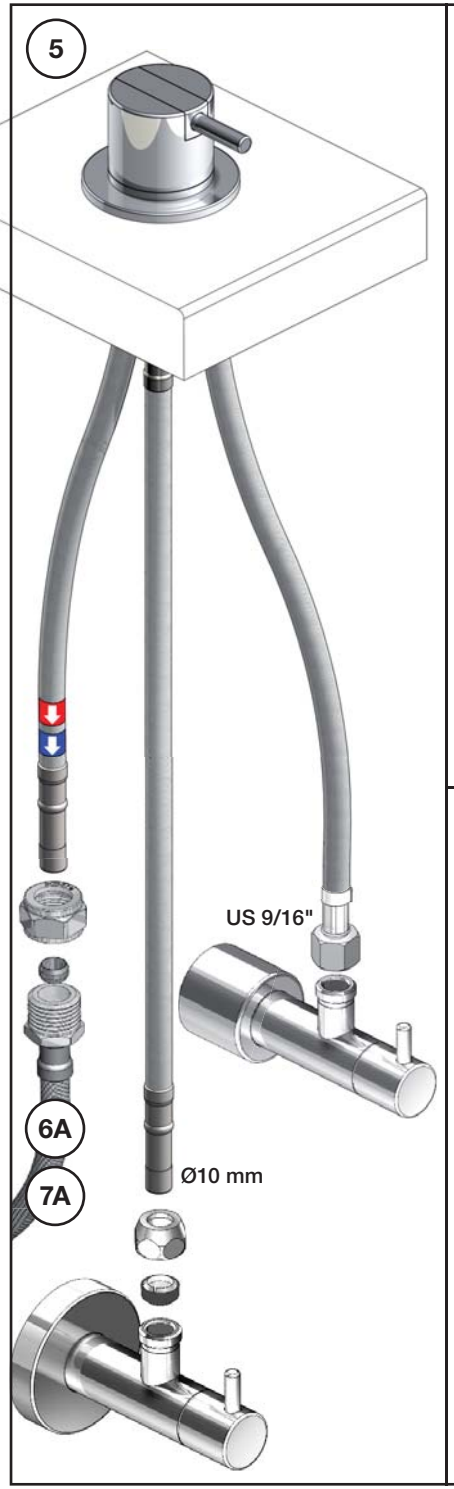

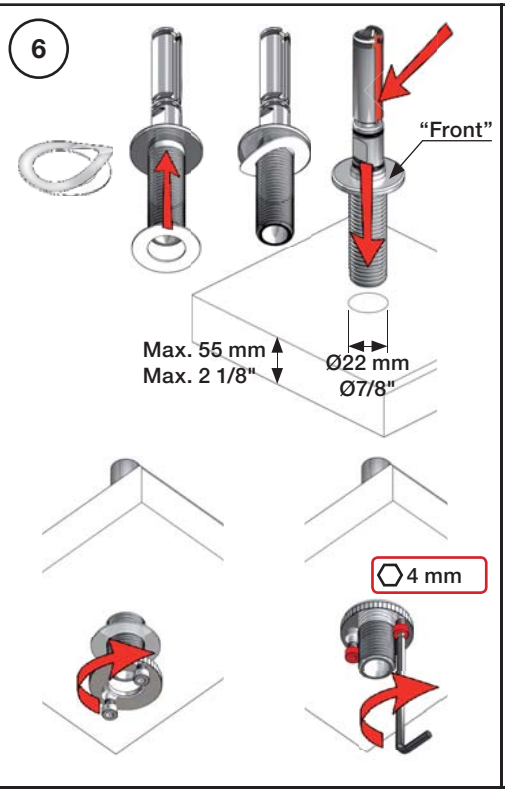

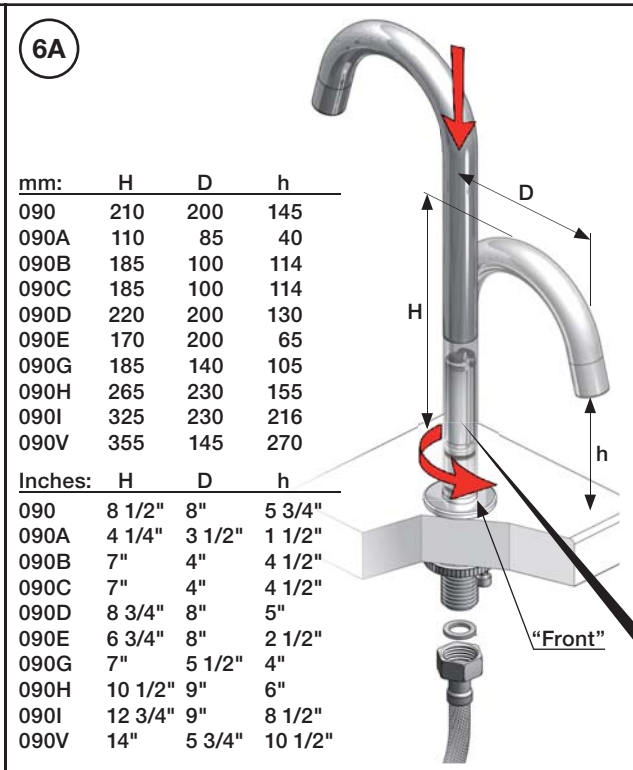

mm:	H	D	h
090	210	200	145
090A	110	85	40
090B	185	100	114
090C	185	100	114
090D	220	200	130
090E	170	200	65
090G	185	140	105
090H	265	230	155
090I	325	230	216
090V	355	145	270

Inches:	H	D	h
090	8 1/2"	8"	5 3/4"
090A	4 1/4"	3 1/2"	1 1/2"
090B	7"	4"	4 1/2"
090C	7"	4"	4 1/2"
090D	8 3/4"	8"	5"
090E	6 3/4"	8"	2 1/2"
090G	7"	5 1/2"	4"
090H	10 1/2"	9"	6"
090I	12 3/4"	9"	8 1/2"
090V	14"	5 3/4"	10 1/2"

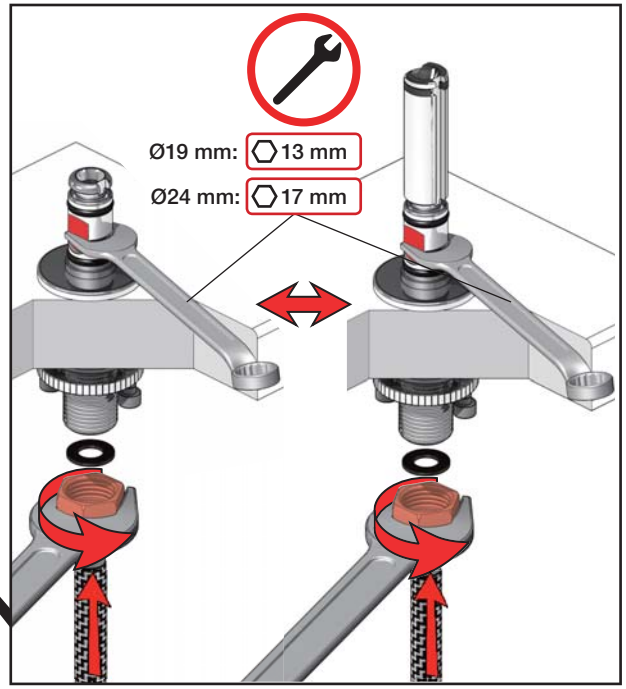

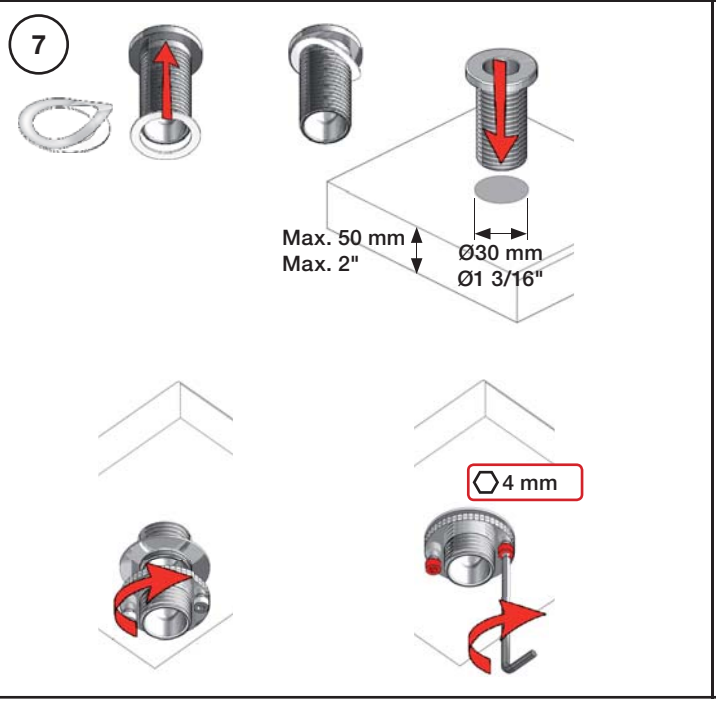

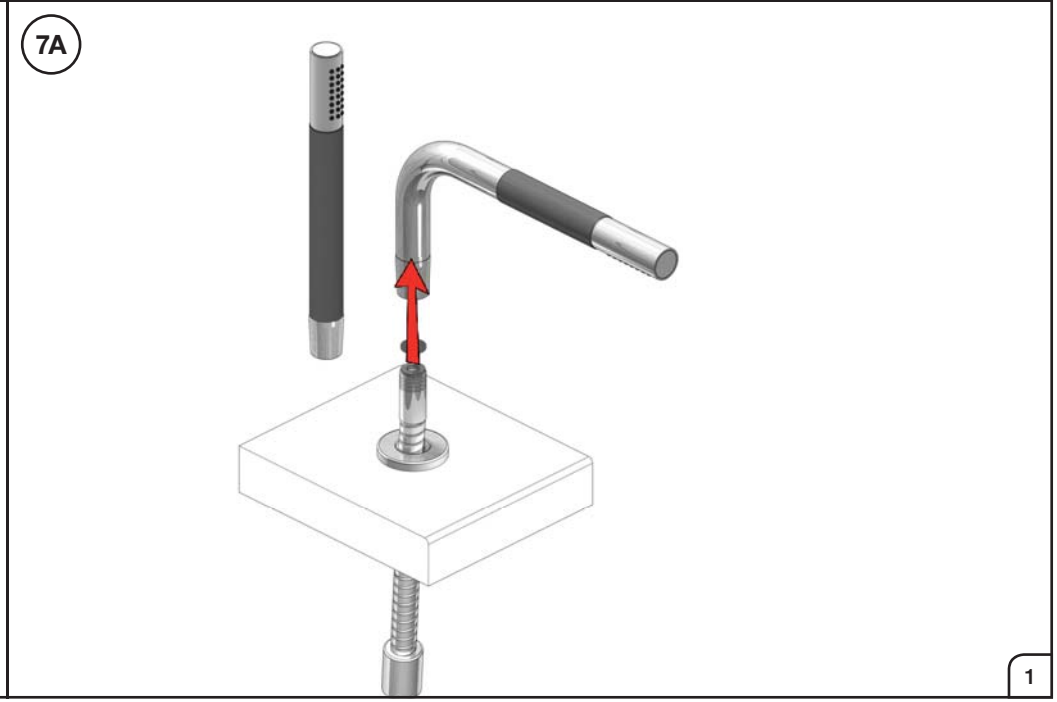

VOLA A/S • Lunavej 2 • DK-8700 Horsens • Tel. +45 7023 5500 • Fax +45 7023 5511 • sales@vola.dk • www.vola.com

VOLA 090, 090A, 090B:
VOLA 090C, 090D, 090E:
VOLA 090G, 090H, 090I, 090V: 1 - 4

VOLA 090FM: 5

Fitting instruction
Montageanleitung
Monteringsvejledning
Monteringsvägledning
Montage hanleiding
Manuel de montage

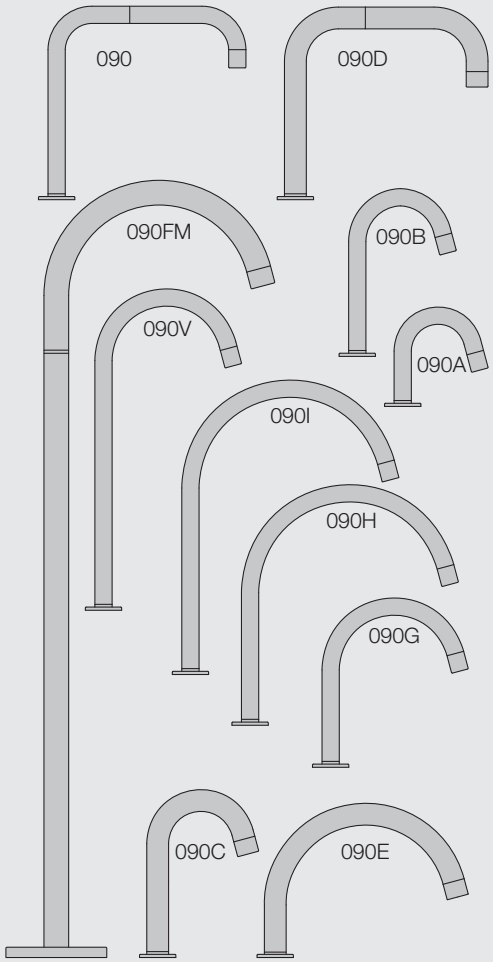

www.vola.com

vola

mnt_090_V3_40999824

5 703182 372365

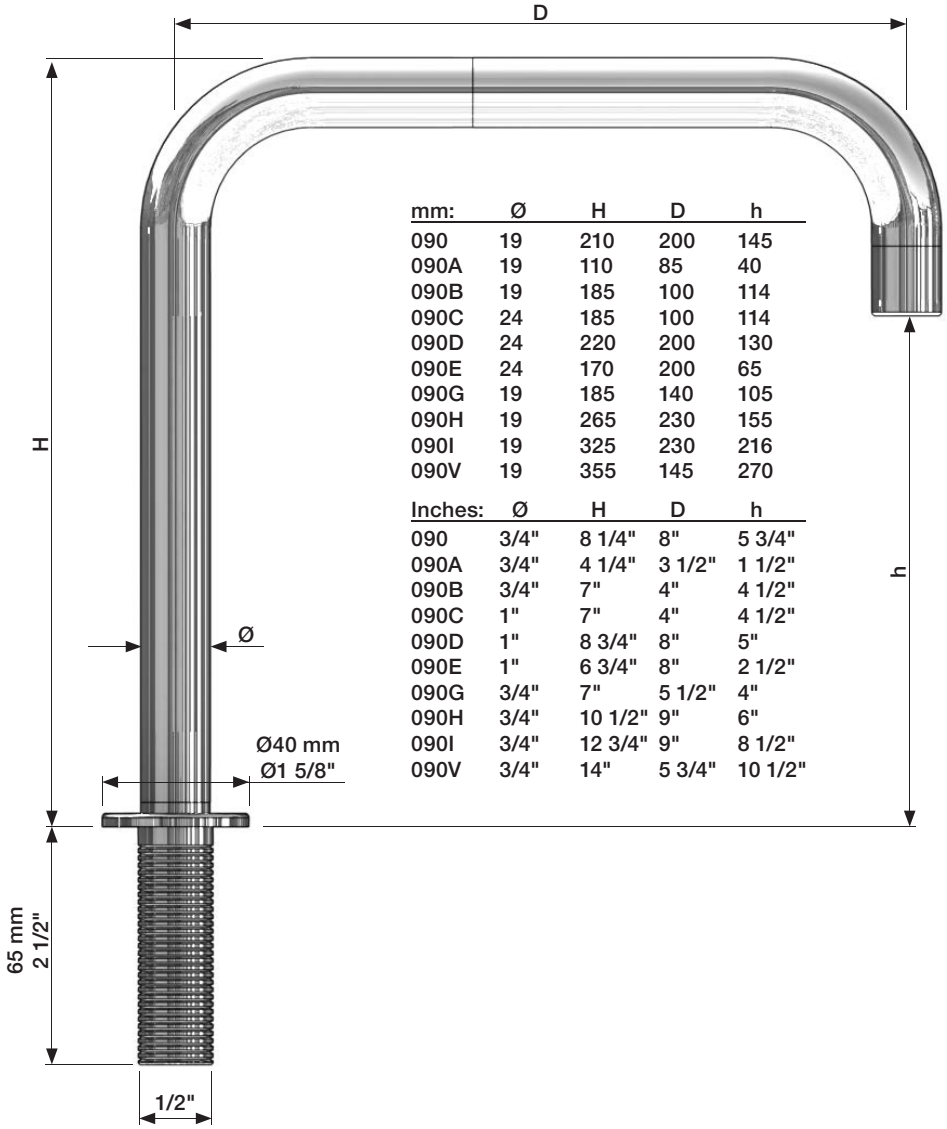

mm:	Ø	H	D	h
090	19	210	200	145
090A	19	110	85	40
090B	19	185	100	114
090C	24	185	100	114
090D	24	220	200	130
090E	24	170	200	65
090G	19	185	140	105
090H	19	265	230	155
090I	19	325	230	216
090V	19	355	145	270

Inches:	Ø	H	D	h
090	3/4"	8 1/4"	8"	5 3/4"
090A	3/4"	4 1/4"	3 1/2"	1 1/2"
090B	3/4"	7"	4"	4 1/2"
090C	1"	7"	4"	4 1/2"
090D	1"	8 3/4"	8"	5"
090E	1"	6 3/4"	8"	2 1/2"
090G	3/4"	7"	5 1/2"	4"
090H	3/4"	10 1/2"	9"	6"
090I	3/4"	12 3/4"	9"	8 1/2"
090V	3/4"	14"	5 3/4"	10 1/2"

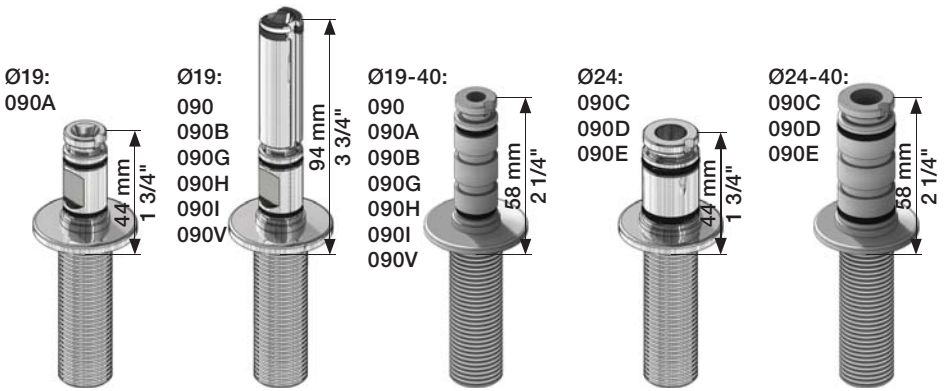

1

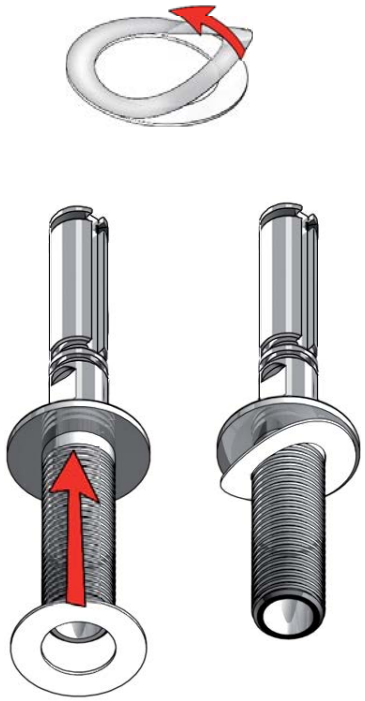

2

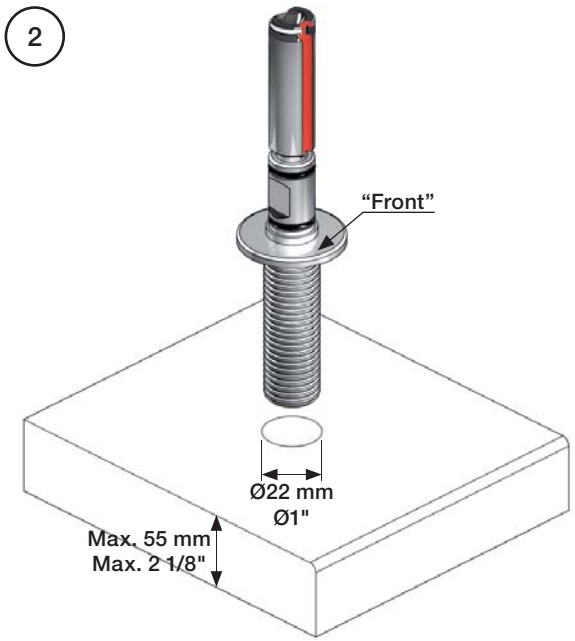

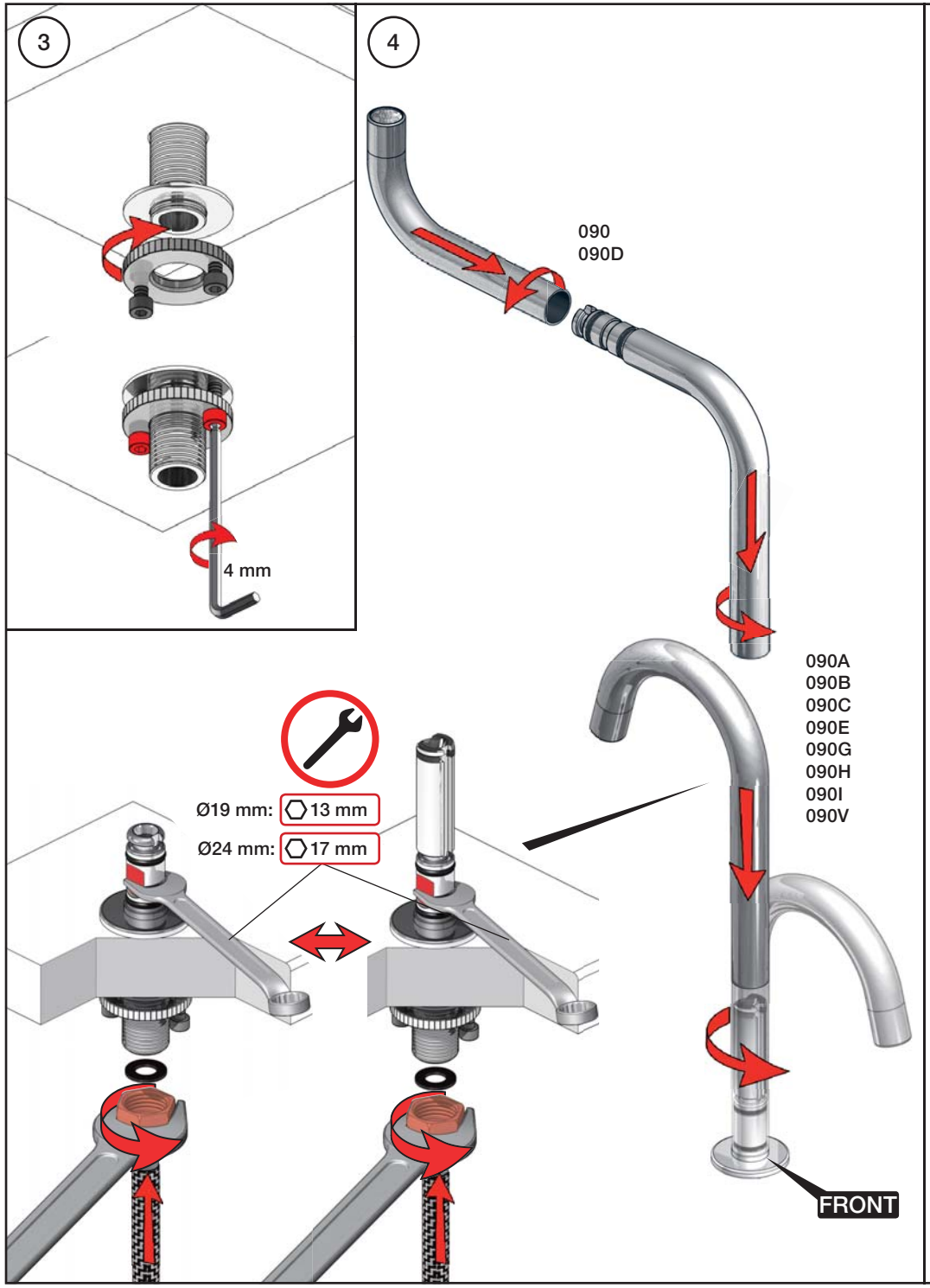

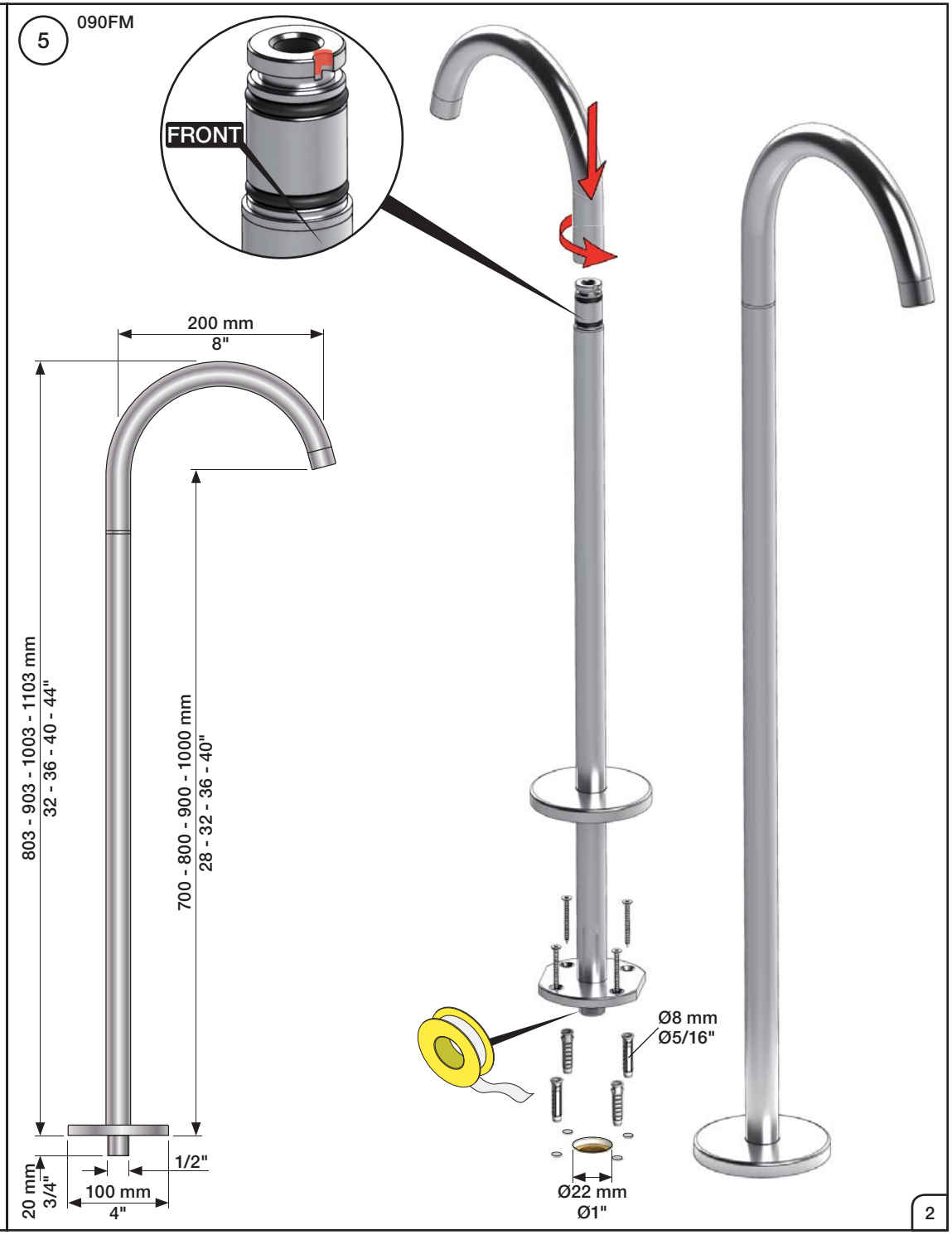

VOLA A/S • Lunavej 2 • DK-8700 Horsens • Tel. +45 7023 5500 • Fax +45 7023 5511 • sales@vola.dk • www.vola.com

VOLA 500, 590, 500T1
VOLA 2500
VOLA SC1, SC3, SC5, SC7, SC9, SC10, SC12

Fitting instruction
Montageanleitung
Monteringsvejledning
Monteringsvägledning
Montage hanleiding
Manuel de montage

590:

GODKENDT
TIL DRIKKEVAND

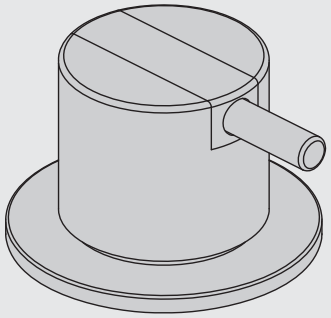

www.vola.com

vola

500 - 2500_V9_40999844

5 703182 096742

500/2500:

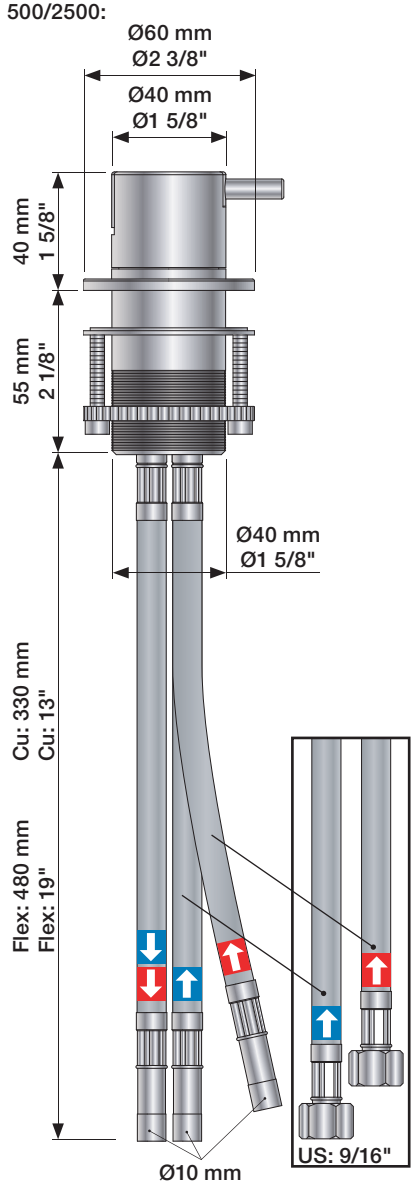

Data, 3 Bar /43.5 Psi:

	l/min.	Gal/min.
500:	14,5	3.8
590:	9,0	2.4
500-T1:	11,0	2.9
2500:	18,7	4.9
SC1:	18,7	4.9
SC5, 7:	18,0	4.8
SC9:	11,0	2.9

Max. 65°C, 150°F

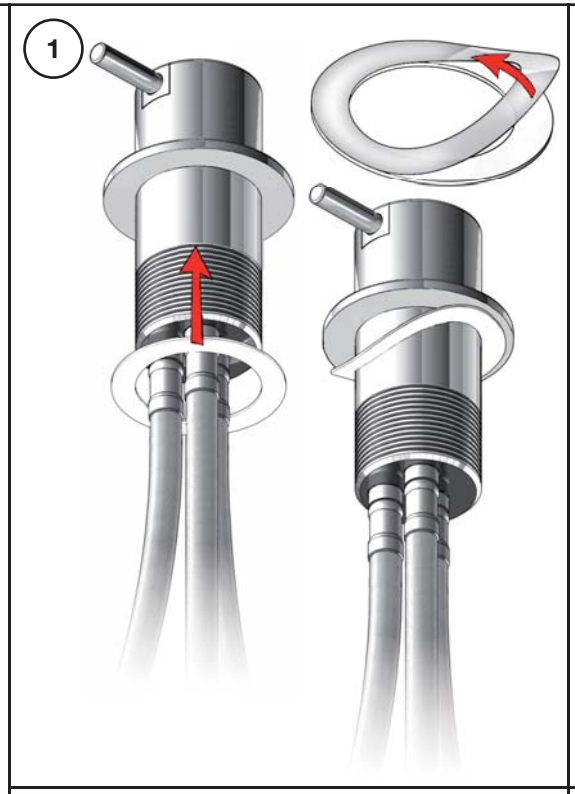

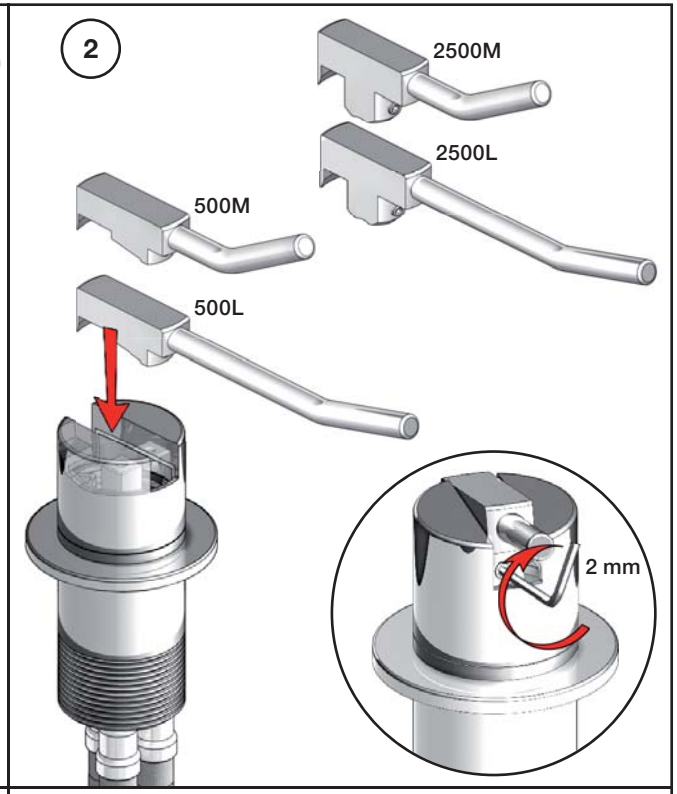

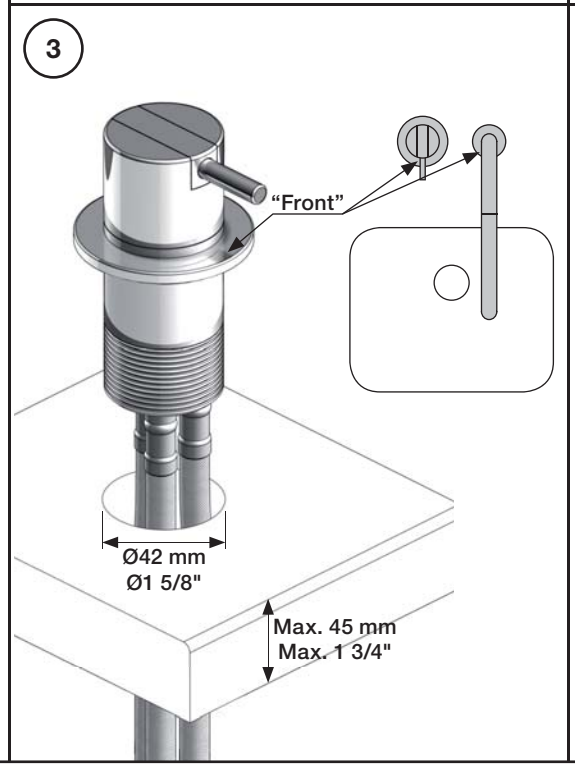

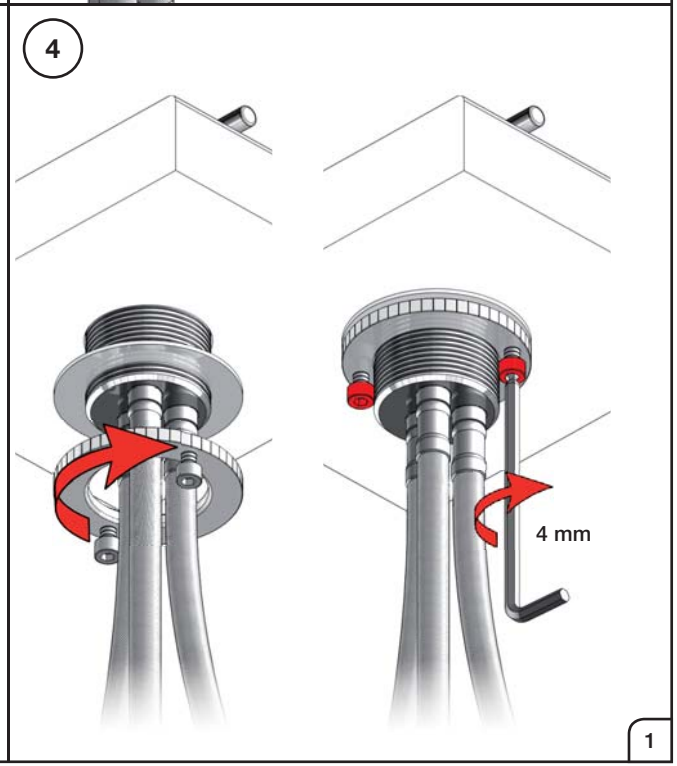

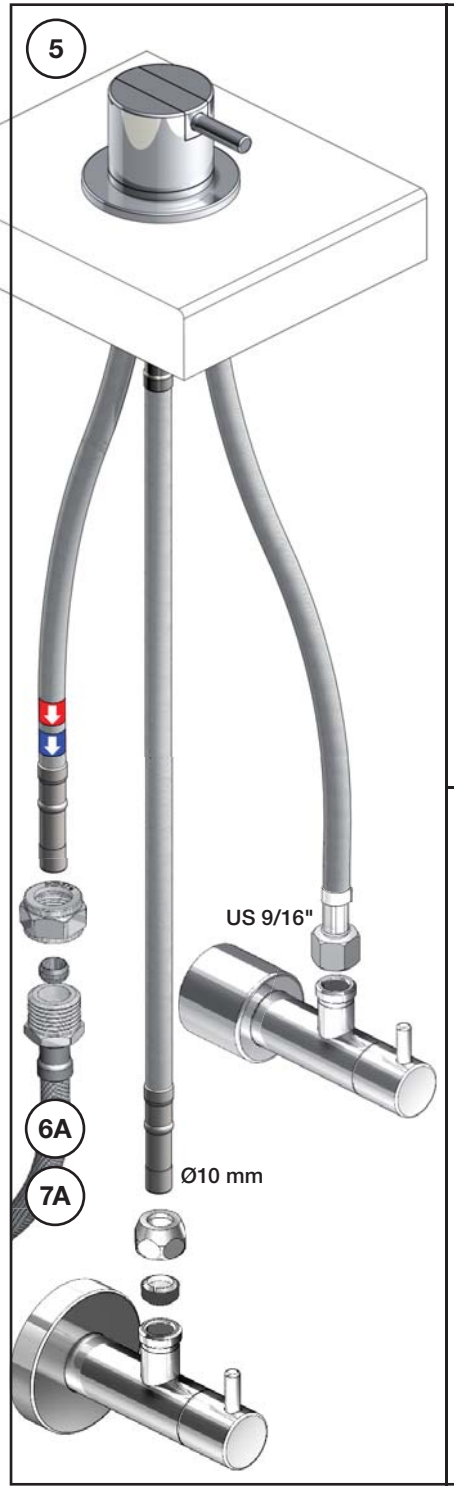

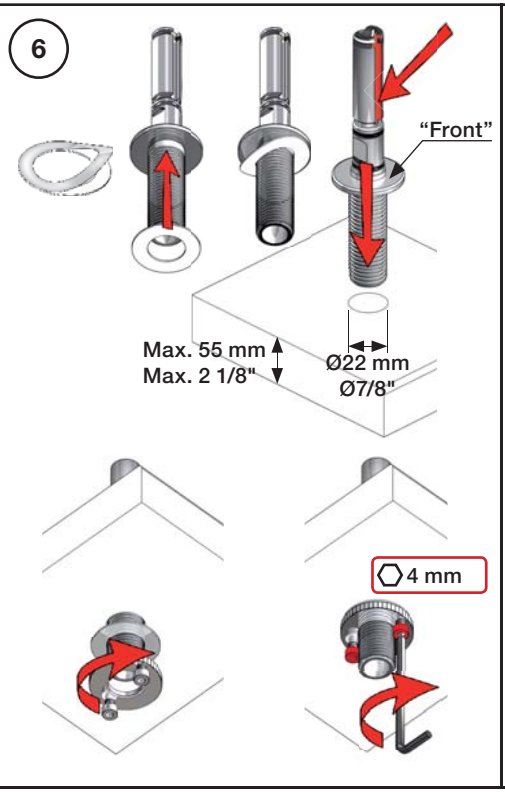

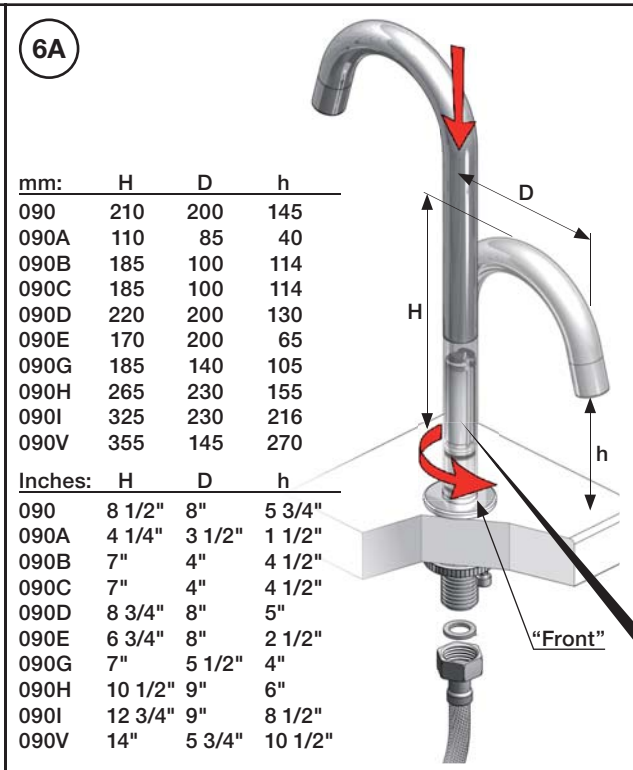

mm:	H	D	h
090	210	200	145
090A	110	85	40
090B	185	100	114
090C	185	100	114
090D	220	200	130
090E	170	200	65
090G	185	140	105
090H	265	230	155
090I	325	230	216
090V	355	145	270

Inches:	H	D	h
090	8 1/2"	8"	5 3/4"
090A	4 1/4"	3 1/2"	1 1/2"
090B	7"	4"	4 1/2"
090C	7"	4"	4 1/2"
090D	8 3/4"	8"	5"
090E	6 3/4"	8"	2 1/2"
090G	7"	5 1/2"	4"
090H	10 1/2"	9"	6"
090I	12 3/4"	9"	8 1/2"
090V	14"	5 3/4"	10 1/2"

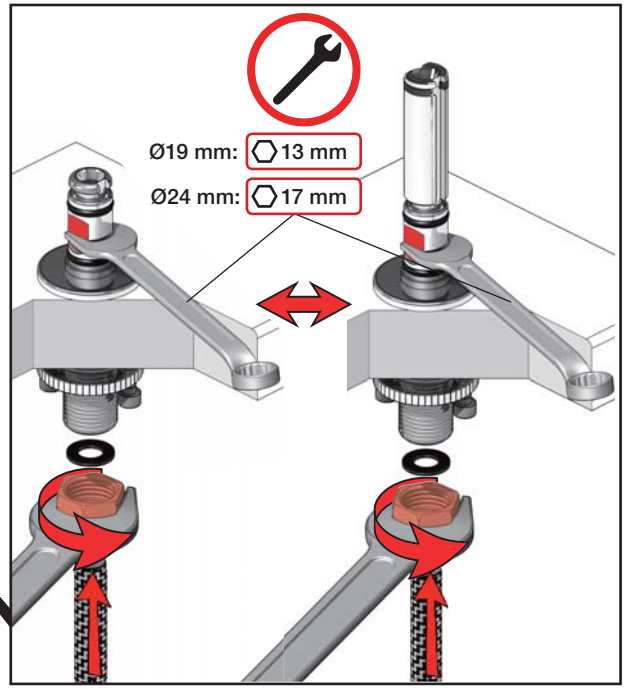

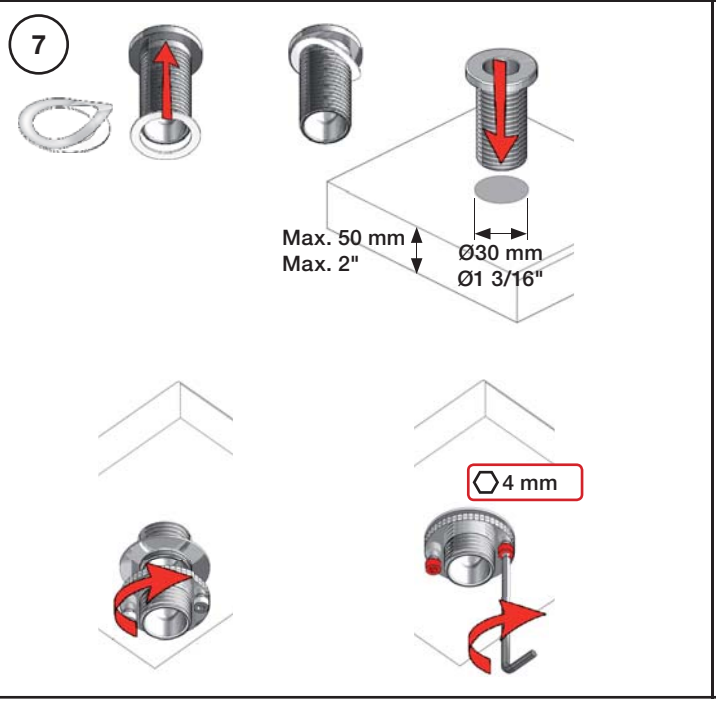

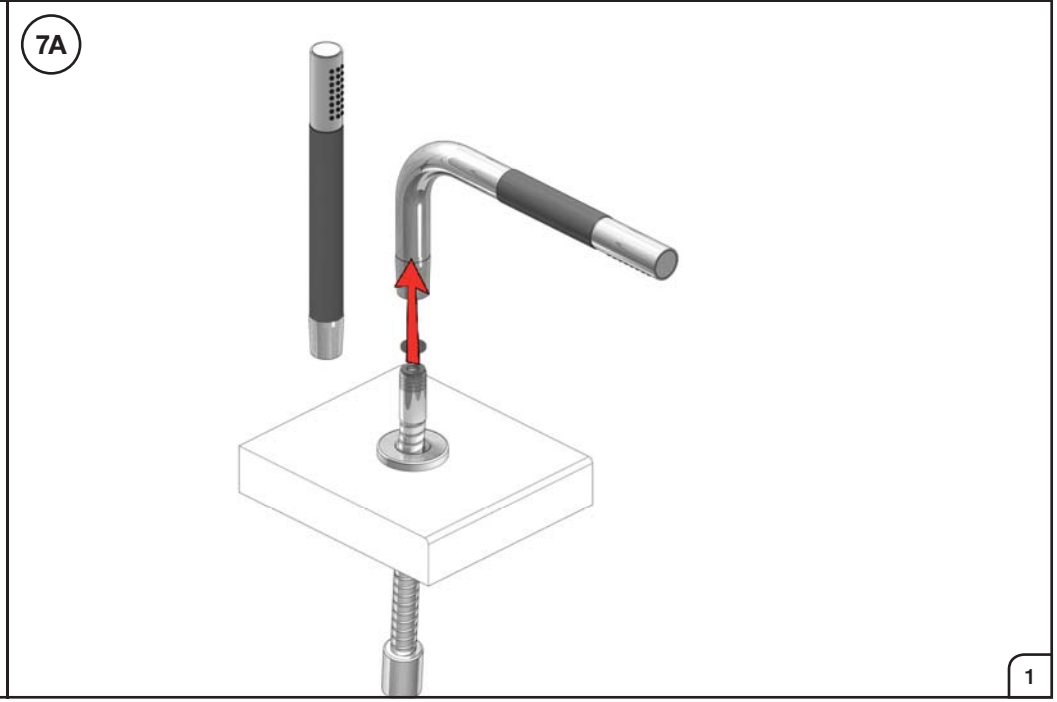

VOLA A/S • Lunavej 2 • DK-8700 Horsens • Tel. +45 7023 5500 • Fax +45 7023 5511 • sales@vola.dk • www.vola.com

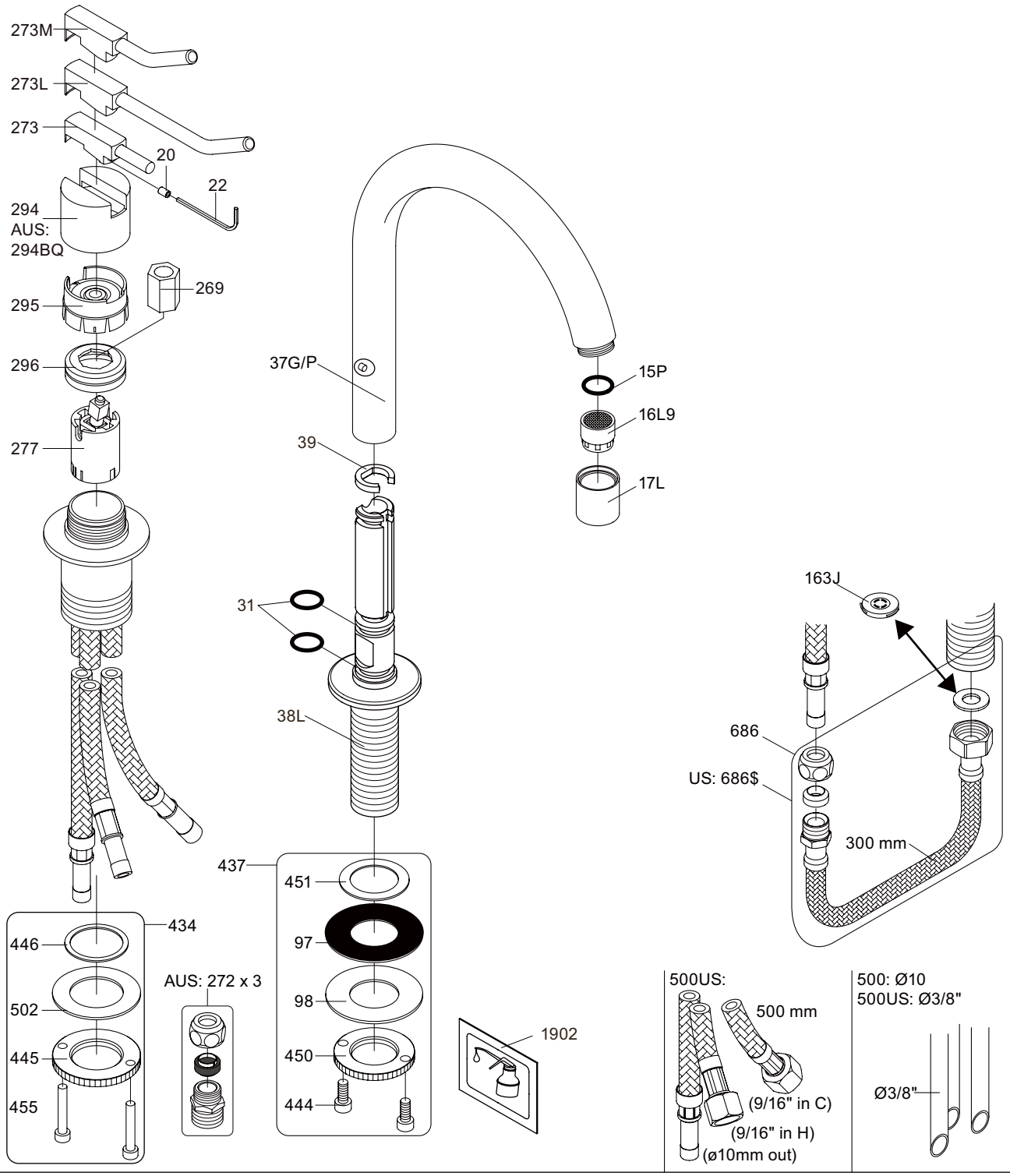

VR277K: VR22, VR269, VR277
VR297: VR20, VR22, VR269, VR273, VR277, VR294, VR295, VR296
VR434: VR261, VR263, VR440, VR442, 2xVR455
VR437: VR97, VR98, 2xVR444, VR450, VR451
NR.10: VR20, VR22, VR273, VR294, VR295
VR090: VR15P, VR16L9

vola
Lunavej 2
DK-8700 Horsens
Tlf : + 45 7023 5500
Fax: + 45 7023 5511
sales@vola.com
www.vola.com

VOLA 590H

Date
Maj. 17

Rev.
4

Sheet
SB 27.76

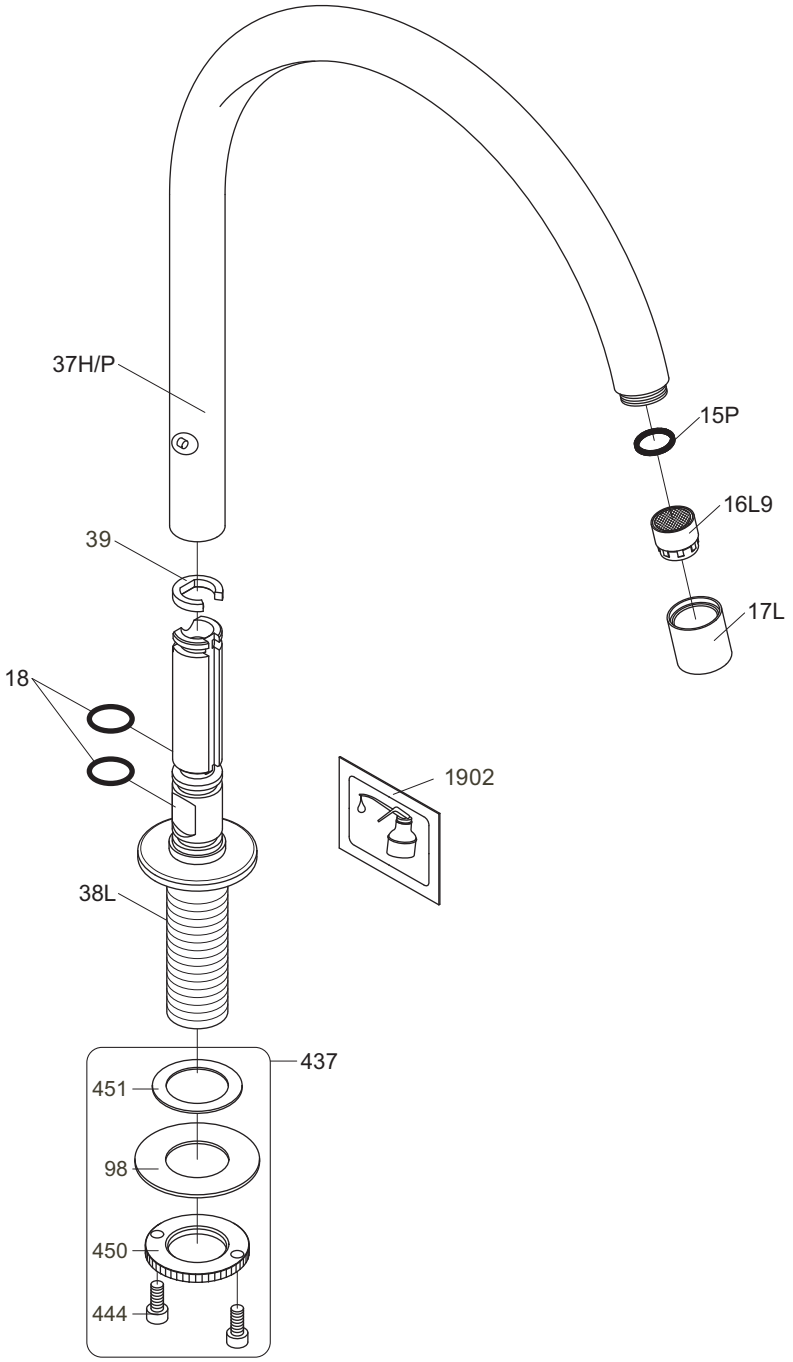

VR17L9K: VR15P, VR16L9, VR17L
VR437: VR98, 2xVR444, VR450, VR451

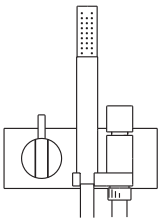

VOLA A/S
Lunavej 2
DK-8700 Horsens
Tlf : + 45 7023 5500
Fax: + 45 7023 5511
sales@vola.com
www.vola.com

VOLA 090H

Dato
Apr. 12

Rev.
3

Blad
SB 19.4

500:

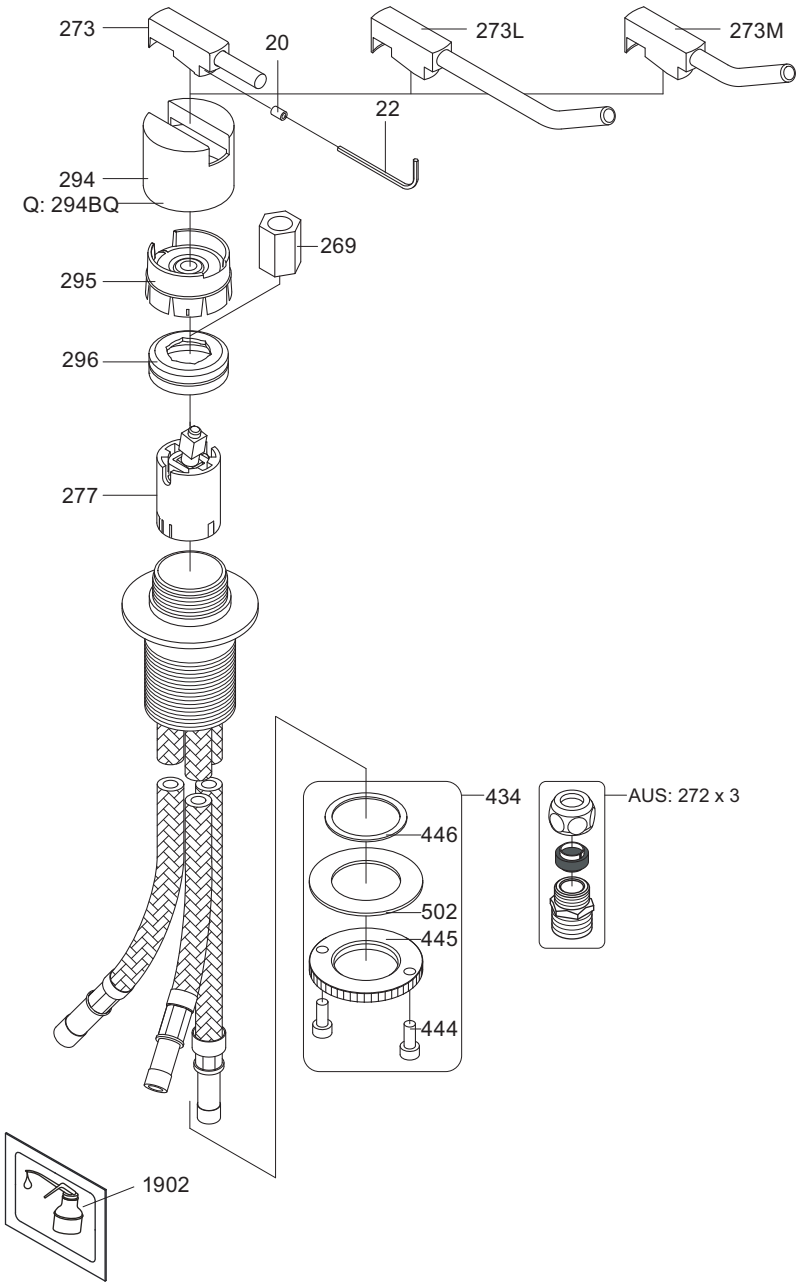

500US:

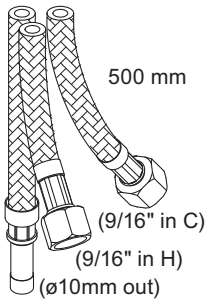

500: Ø10
500US: Ø3/8"

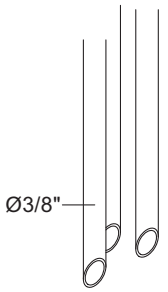

VR277K:	VR22, VR269, VR277
VR297:	VR20, VR22, VR269, VR273, VR277, VR294, VR295, VR296
VR434:	2xVR444, VR445, VR446, VR502
NR.10:	VR20, VR22, VR273, VR294, VR295

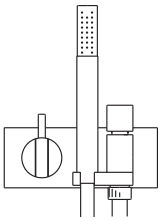

VOLA A/S
Lunavej 2
DK-8700 Horsens
Tlf : + 45 7023 5500
Fax: + 45 7023 5511
sales@vola.com
www.vola.com

VOLA 500/M/L

Dato
Mar. 11

Rev.
3

Blad
SB4.1